NSTEP STANDARD

NSTEP STANDARD



Housing	Aluminium
Rated power [W]	9.8
Light source	LED Module (replaceable)
Lumen output [lm]	1000lm
Luminous flux tolerance	10%
SDCM colour tolerance	<3
Light distribution / Emission	indirect
Angle of distribution	asymmetrical
IP protection class	IP65
Impact resistance	IK10
Working temperature range	-20°C ÷ +55°C
Lifetime L80B10	60 000h
Protection class	I
Wiring	3x1mm^2
Connection	0.2m
Dimming	ON-OFF
Power supplies	built-in
Dimensions	L: 189,8mm x H: 95mm x W: 54mm
Power supply type	220-240V AC
CRI	80












Accessories



NSTEP-STANDARD-ABS

Dimensions

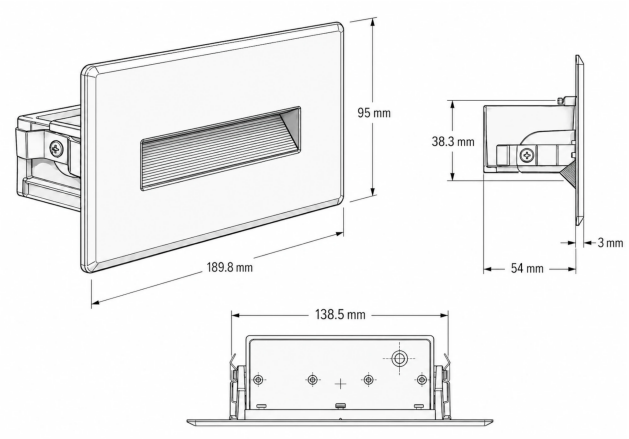

Niviss reserves the right to make technical changes without prior notice
product_card_20261113_123038

Variants

Photo	P/N	[W]	[LM]	[K]	CRI/Ra>	PSU Type	DEG	Painting	Housing	Dimming
	NSTEP-STANDARD-10-NW-AS-RC-BM-HV	10	1020lm	4000K	80	220-240V AC	asymmetric	Black Mat	Aluminium	ON-OFF
	NSTEP-STANDARD-10-NW-AS-RC-BR-HV	10	1020lm	4000K	80	220-240V AC	asymmetric	Brown	Aluminium	ON-OFF
	NSTEP-STANDARD-10-NW-AS-RC-WM-HV	10	1020lm	4000K	80	220-240V AC	asymmetric	White Mat	Aluminium	ON-OFF
	NSTEP-STANDARD-10-VW-AS-RC-BM-HV	10	980lm	2700K	90	220-240V AC	asymmetric	Black Mat	Aluminium	ON-OFF
	NSTEP-STANDARD-10-VW-AS-RC-BR-HV	10	980lm	2700K	90	220-240V AC	asymmetric	Brown	Aluminium	ON-OFF
	NSTEP-STANDARD-10-VW-AS-RC-WM-HV	10	980lm	2700K	90	220-240V AC	asymmetric	White Mat	Aluminium	ON-OFF
	NSTEP-STANDARD-10-WW-AS-RC-BM-HV	10	1000lm	3000K	90	220-240V AC	asymmetric	Black Mat	Aluminium	ON-OFF
	NSTEP-STANDARD-10-WW-AS-RC-BR-HV	10	1000lm	3000K	90	220-240V AC	asymmetric	Brown	Aluminium	ON-OFF
	NSTEP-STANDARD-10-WW-AS-RC-WM-HV	10	1000lm	3000K	90	220-240V AC	asymmetric	White Mat	Aluminium	ON-OFF

GENERAL TERMS OF USE

- Before using a luminaire, make sure what voltage range it is designed to.
- Connecting to the power supply should be done when the power supply is off.
- Use appropriate sockets and plugs: Ensure that your electrical sockets and plugs are compatible with the lamp's voltage and plug type.
- Use appropriate wiring for luminaires.
- Avoid overloading electrical circuits by not connecting too many lamps to a single outlet or circuit. Check the condition of the power cord and plug for any signs of damage or wear.
- Pay attention to the correct polarity when connecting the luminaires. Incorrect polarity may prevent the luminaires from functioning properly or could potentially damage them.
- Installation of the luminaires should be done by qualified person.
- Keep your luminaires clean and free from dust and debris, as it can affect their performance.
- Follow the luminaire connection diagram above.
- Avoid direct exposure of bright light sources to your eyes. Position luminaires in a way that minimizes direct glare or uncomfortable brightness.
- Ensure that the luminaire is placed on a stable surface and kept away from flammable materials. Allow sufficient clearance around the luminaire to prevent overheating.
- Keep away from fire.

Niviss is not responsible for any damage or failure due to not comply with above rules. Otherwise, the complaint will not be taken into account.

ENVIRONMENTAL CAUTION!

It is prohibited to dispose of obsolete and waste electrical and electronic equipment together with regular household wastes. They should be properly sorted and recycled. Old electrical and electronic equipment should be returned to a waste collection point established by a waste-management service. Waste electrical and electronic equipment can be broken down to base materials and then recycled. For more information regarding waste management please contact your local authorities, waste-management service or the seller of electrical and electronic devices.