FLOODIE-XL

Floodie XL — największy i najmocniejszy reflektor z kolekcji Floodie, stworzony do efektownego oświetlania rozległych powierzchni, elewacji i monumentalnych obiektów architektonicznych.



Obudowa	Aluminium
Rodzaj szkła	Hartowane
Źródło światła	LED Module (replaceable)
Tolerancja strumienia świetlnego	10%
Tolerancja barwowa SDCM	<3
Rozsył światła / Emisja	symetryczny / bezpośredni
Klasa szczelności IP	IP67
Odporność na uderzenia	IK06
Zakres temperatury pracy	-35°C ÷ +65°C
Żywotność L80B10	>75 000h
Klasa ochronności	HV: I; LV: III
Okablowanie	HV: H07RN-F 3G1 / LV: H07RN-F 2X1.5
Podłączenie	1m
Ściemnianie	LV: DALI / DALI2; HV: ON-OFF / TRIAC (on request)
Zasilacze	wbudowany
Kąt rozsyłu	10, 23, 36
Moc znamionowa [W]	25
Strumień świetlny [lm]	2270-2450lm
Rodzaj zasilania	HV: 100-245V AC 50/60Hz ; LV: 24V DC
CRI	>90 / >80

Dostępne wersje



CONTACT: +48 58 781 33 99 sales@niviss.com www.niviss.com

Niviss reserves the right to make technical changes without prior notice
product_card_20261117_053122

Akcesoria



FLOODIE-SPIKE-44-205-M6x10MM



FLOODIE-XL-BASE-xx-91-10



FLOODIE-TREE-BELT-S-yy



FLOODIE-TREE-BELT-N-yy



Honeycomb

Wymiary

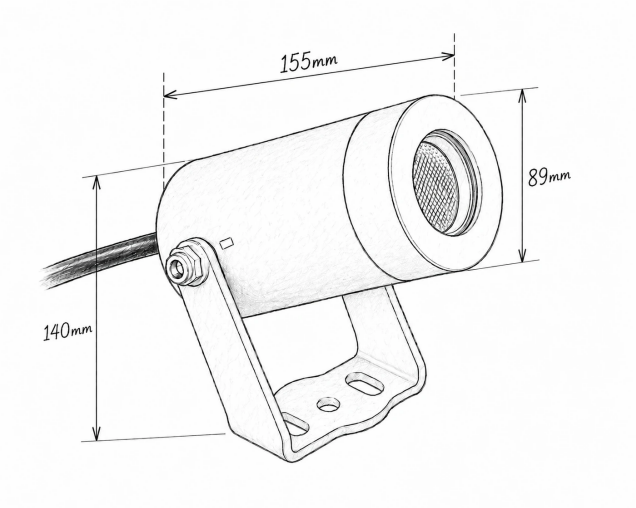

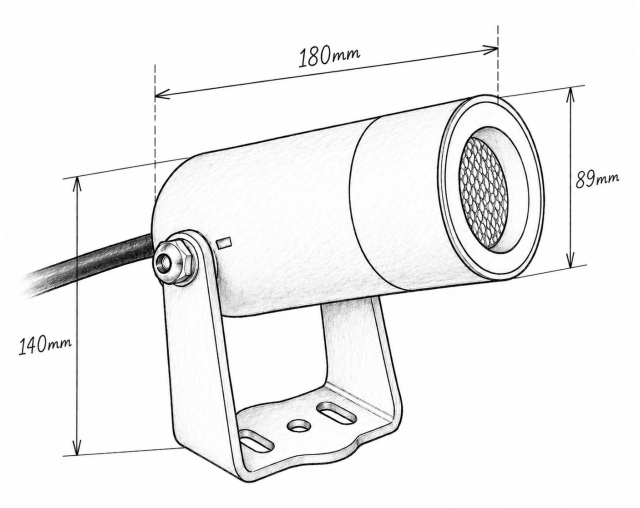

Niviss reserves the right to make technical changes without prior notice
product_card_20261117_053122

Lista wariantów

Zdjęcie	Indeks	[W]	[LM]	[K]	CRI/Ra>	Rodzaj zasilania	Kąt	Malowanie	Obudowa	Ściemnianie
	FLOODIE-XL-F-25-CW-10-BM-HV	25	2390lm	6000K	80	100-245V AC	10	Black Mat	Aluminium	ON-OFF
	FLOODIE-XL-F-25-CW-10-BM-HV-UB	25	2390lm	6000K	80	100-245V AC	10	Black Mat	Aluminium	ON-OFF
	FLOODIE-XL-F-25-CW-10-BM-HV-US	25	2390lm	6000K	80	100-245V AC	10	Black Mat	Aluminium	ON-OFF
	FLOODIE-XL-F-25-CW-10-BM-LV	25	2450lm	6000K	80	24V DC	10	Black Mat	Aluminium	DALI
	FLOODIE-XL-F-25-CW-10-BM-LV-UB	25	2450lm	6000K	80	24V DC	10	Black Mat	Aluminium	DALI
	FLOODIE-XL-F-25-CW-10-BM-LV-US	25	2450lm	6000K	80	24V DC	10	Black Mat	Aluminium	DALI
	FLOODIE-XL-F-25-CW-10-BR-HV	25	2390lm	6000K	80	100-245V AC	10	Brown Corten	Aluminium	ON-OFF
	FLOODIE-XL-F-25-CW-10-BR-LV	25	2450lm	6000K	80	24V DC	10	Brown Corten	Aluminium	DALI
	FLOODIE-XL-F-25-CW-10-GD-HV	25	2390lm	6000K	80	100-245V AC	10	Dark Grey	Aluminium	ON-OFF
	FLOODIE-XL-F-25-CW-10-GD-LV	25	2450lm	6000K	80	24V DC	10	Dark Grey	Aluminium	DALI
	FLOODIE-XL-F-25-CW-10-WM-HV	25	2390lm	6000K	80	100-245V AC	10	White Mat	Aluminium	ON-OFF
	FLOODIE-XL-F-25-CW-10-WM-LV	25	2450lm	6000K	80	24V DC	10	White Mat	Aluminium	DALI
	FLOODIE-XL-F-25-CW-23-BM-HV	25	2390lm	6000K	80	100-245V AC	23	Black Mat	Aluminium	ON-OFF
	FLOODIE-XL-F-25-CW-23-BM-HV-UB	25	2390lm	6000K	80	100-245V AC	23	Black Mat	Aluminium	ON-OFF
	FLOODIE-XL-F-25-CW-23-BM-HV-US	25	2390lm	6000K	80	100-245V AC	23	Black Mat	Aluminium	ON-OFF
	FLOODIE-XL-F-25-CW-23-BM-LV	25	2450lm	6000K	80	24V DC	23	Black Mat	Aluminium	DALI
	FLOODIE-XL-F-25-CW-23-BM-LV-UB	25	2450lm	6000K	80	24V DC	23	Black Mat	Aluminium	DALI
	FLOODIE-XL-F-25-CW-23-BM-LV-US	25	2450lm	6000K	80	24V DC	23	Black Mat	Aluminium	DALI
	FLOODIE-XL-F-25-CW-23-BR-HV	25	2390lm	6000K	80	100-245V AC	23	Brown Corten	Aluminium	ON-OFF
	FLOODIE-XL-F-25-CW-23-BR-LV	25	2450lm	6000K	80	24V DC	23	Brown Corten	Aluminium	DALI
	FLOODIE-XL-F-25-CW-23-GD-HV	25	2390lm	6000K	80	100-245V AC	23	Dark Grey	Aluminium	ON-OFF
	FLOODIE-XL-F-25-CW-23-GD-LV	25	2450lm	6000K	80	24V DC	23	Dark Grey	Aluminium	DALI

Niviss reserves the right to make technical changes without prior notice
product_card_20261117_053122

	FLOODIE-XL-F-25-CW-23-WM-HV	25	2390lm	6000K	80	100-245V AC	23	White Mat	Aluminium	ON-OFF
	FLOODIE-XL-F-25-CW-23-WM-LV	25	2450lm	6000K	80	24V DC	23	White Mat	Aluminium	DALI
	FLOODIE-XL-F-25-CW-36-BM-HV	25	2390lm	6000K	80	100-245V AC	36	Black Mat	Aluminium	ON-OFF
	FLOODIE-XL-F-25-CW-36-BM-HV-UB	25	2390lm	6000K	80	100-245V AC	36	Black Mat	Aluminium	ON-OFF
	FLOODIE-XL-F-25-CW-36-BM-HV-US	25	2390lm	6000K	80	100-245V AC	36	Black Mat	Aluminium	ON-OFF
	FLOODIE-XL-F-25-CW-36-BM-LV	25	2450lm	6000K	80	24V DC	36	Black Mat	Aluminium	DALI
	FLOODIE-XL-F-25-CW-36-BM-LV-UB	25	2450lm	6000K	80	24V DC	36	Black Mat	Aluminium	DALI
	FLOODIE-XL-F-25-CW-36-BM-LV-US	25	2450lm	6000K	80	24V DC	36	Black Mat	Aluminium	DALI
	FLOODIE-XL-F-25-CW-36-BR-HV	25	2390lm	6000K	80	100-245V AC	36	Brown Corten	Aluminium	ON-OFF
	FLOODIE-XL-F-25-CW-36-BR-LV	25	2450lm	6000K	80	24V DC	36	Brown Corten	Aluminium	DALI
	FLOODIE-XL-F-25-CW-36-GD-HV	25	2390lm	6000K	80	100-245V AC	36	Dark Grey	Aluminium	ON-OFF
	FLOODIE-XL-F-25-CW-36-GD-LV	25	2450lm	6000K	80	24V DC	36	Dark Grey	Aluminium	DALI
	FLOODIE-XL-F-25-CW-36-WM-HV	25	2390lm	6000K	80	100-245V AC	36	White Mat	Aluminium	ON-OFF
	FLOODIE-XL-F-25-CW-36-WM-LV	25	2450lm	6000K	80	24V DC	36	White Mat	Aluminium	DALI
	FLOODIE-XL-F-25-NW-10-BM-HV	25	2350lm	4000K	80	100-245V AC	10	Black Mat	Aluminium	ON-OFF
	FLOODIE-XL-F-25-NW-10-BM-HV-UB	25	2350lm	4000K	80	100-245V AC	10	Black Mat	Aluminium	ON-OFF
	FLOODIE-XL-F-25-NW-10-BM-HV-US	25	2350lm	4000K	80	100-245V AC	10	Black Mat	Aluminium	ON-OFF
	FLOODIE-XL-F-25-NW-10-BM-LV	25	2410lm	4000K	80	24V DC	10	Black Mat	Aluminium	DALI
	FLOODIE-XL-F-25-NW-10-BM-LV-UB	25	2410lm	4000K	80	24V DC	10	Black Mat	Aluminium	DALI
	FLOODIE-XL-F-25-NW-10-BM-LV-US	25	2410lm	4000K	80	24V DC	10	Black Mat	Aluminium	DALI
	FLOODIE-XL-F-25-NW-10-BR-HV	25	2350lm	4000K	80	100-245V AC	10	Brown Corten	Aluminium	ON-OFF
	FLOODIE-XL-F-25-NW-10-BR-LV	25	2410lm	4000K	80	24V DC	10	Brown Corten	Aluminium	DALI
	FLOODIE-XL-F-25-NW-10-GD-HV	25	2350lm	4000K	80	100-245V AC	10	Dark Grey	Aluminium	ON-OFF
	FLOODIE-XL-F-25-NW-10-GD-LV	25	2410lm	4000K	80	24V DC	10	Dark Grey	Aluminium	DALI

Niviss reserves the right to make technical changes without prior notice
product_card_20261117_053122

	FLOODIE-XL-F-25-NW-10-WM-HV	25	2350lm	4000K	80	100-245V AC	10	White Mat	Aluminium	ON-OFF
	FLOODIE-XL-F-25-NW-10-WM-LV	25	2410lm	4000K	80	24V DC	10	White Mat	Aluminium	DALI
	FLOODIE-XL-F-25-NW-23-BM-HV	25	2350lm	4000K	80	100-245V AC	23	Black Mat	Aluminium	ON-OFF
	FLOODIE-XL-F-25-NW-23-BM-HV-UB	25	2350lm	4000K	80	100-245V AC	23	Black Mat	Aluminium	ON-OFF
	FLOODIE-XL-F-25-NW-23-BM-HV-US	25	2350lm	4000K	80	100-245V AC	23	Black Mat	Aluminium	ON-OFF
	FLOODIE-XL-F-25-NW-23-BM-LV	25	2410lm	4000K	80	24V DC	23	Black Mat	Aluminium	DALI
	FLOODIE-XL-F-25-NW-23-BM-LV-UB	25	2410lm	4000K	80	24V DC	23	Black Mat	Aluminium	DALI
	FLOODIE-XL-F-25-NW-23-BM-LV-US	25	2410lm	4000K	80	24V DC	23	Black Mat	Aluminium	DALI
	FLOODIE-XL-F-25-NW-23-BR-HV	25	2350lm	4000K	80	100-245V AC	23	Brown Corten	Aluminium	ON-OFF
	FLOODIE-XL-F-25-NW-23-BR-LV	25	2410lm	4000K	80	24V DC	23	Brown Corten	Aluminium	DALI
	FLOODIE-XL-F-25-NW-23-GD-HV	25	2350lm	4000K	80	100-245V AC	23	Dark Grey	Aluminium	ON-OFF
	FLOODIE-XL-F-25-NW-23-GD-LV	25	2410lm	4000K	80	24V DC	23	Dark Grey	Aluminium	DALI
	FLOODIE-XL-F-25-NW-23-WM-HV	25	2350lm	4000K	80	100-245V AC	23	White Mat	Aluminium	ON-OFF
	FLOODIE-XL-F-25-NW-23-WM-LV	25	2410lm	4000K	80	24V DC	23	White Mat	Aluminium	DALI
	FLOODIE-XL-F-25-NW-36-BM-HV	25	2350lm	4000K	80	100-245V AC	36	Black Mat	Aluminium	ON-OFF
	FLOODIE-XL-F-25-NW-36-BM-HV-UB	25	2350lm	4000K	80	100-245V AC	36	Black Mat	Aluminium	ON-OFF
	FLOODIE-XL-F-25-NW-36-BM-HV-US	25	2350lm	4000K	80	100-245V AC	36	Black Mat	Aluminium	ON-OFF
	FLOODIE-XL-F-25-NW-36-BM-LV	25	2410lm	4000K	80	24V DC	36	Black Mat	Aluminium	DALI
	FLOODIE-XL-F-25-NW-36-BM-LV-UB	25	2410lm	4000K	80	24V DC	36	Black Mat	Aluminium	DALI
	FLOODIE-XL-F-25-NW-36-BM-LV-US	25	2410lm	4000K	80	24V DC	36	Black Mat	Aluminium	DALI
	FLOODIE-XL-F-25-NW-36-BR-HV	25	2350lm	4000K	80	100-245V AC	36	Brown Corten	Aluminium	ON-OFF
	FLOODIE-XL-F-25-NW-36-BR-LV	25	2410lm	4000K	80	24V DC	36	Brown Corten	Aluminium	DALI
	FLOODIE-XL-F-25-NW-36-GD-HV	25	2350lm	4000K	80	100-245V AC	36	Dark Grey	Aluminium	ON-OFF
	FLOODIE-XL-F-25-NW-36-GD-LV	25	2410lm	4000K	80	24V DC	36	Dark Grey	Aluminium	DALI

Niviss reserves the right to make technical changes without prior notice
product_card_20261117_053122

	FLOODIE-XL-F-25-NW-36-WM-HV	25	2350lm	4000K	80	100-245V AC	36	White Mat	Aluminium	ON-OFF
	FLOODIE-XL-F-25-NW-36-WM-LV	25	2410lm	4000K	80	24V DC	36	White Mat	Aluminium	DALI
	FLOODIE-XL-F-25-VW-10-BM-HV	25	2270lm	2700K	90	100-245V AC	10	Black Mat	Aluminium	ON-OFF
	FLOODIE-XL-F-25-VW-10-BM-HV-UB	25	2270lm	2700K	90	100-245V AC	10	Black Mat	Aluminium	ON-OFF
	FLOODIE-XL-F-25-VW-10-BM-HV-US	25	2270lm	2700K	90	100-245V AC	10	Black Mat	Aluminium	ON-OFF
	FLOODIE-XL-F-25-VW-10-BM-LV	25	2350lm	2700K	90	24V DC	10	Black Mat	Aluminium	DALI
	FLOODIE-XL-F-25-VW-10-BM-LV-UB	25	2350lm	2700K	90	24V DC	10	Black Mat	Aluminium	DALI
	FLOODIE-XL-F-25-VW-10-BM-LV-US	25	2350lm	2700K	90	24V DC	10	Black Mat	Aluminium	DALI
	FLOODIE-XL-F-25-VW-10-BR-HV	25	2270lm	2700K	90	100-245V AC	10	Brown Corten	Aluminium	ON-OFF
	FLOODIE-XL-F-25-VW-10-BR-LV	25	2350lm	2700K	90	24V DC	10	Brown Corten	Aluminium	DALI
	FLOODIE-XL-F-25-VW-10-GD-HV	25	2270lm	2700K	90	100-245V AC	10	Dark Grey	Aluminium	ON-OFF
	FLOODIE-XL-F-25-VW-10-GD-LV	25	2350lm	2700K	90	24V DC	10	Dark Grey	Aluminium	DALI
	FLOODIE-XL-F-25-VW-10-WM-HV	25	2270lm	2700K	90	100-245V AC	10	White Mat	Aluminium	ON-OFF
	FLOODIE-XL-F-25-VW-10-WM-LV	25	2350lm	2700K	90	24V DC	10	White Mat	Aluminium	DALI
	FLOODIE-XL-F-25-VW-23-BM-HV	25	2270lm	2700K	90	100-245V AC	23	Black Mat	Aluminium	ON-OFF
	FLOODIE-XL-F-25-VW-23-BM-HV-UB	25	2270lm	2700K	90	100-245V AC	23	Black Mat	Aluminium	ON-OFF
	FLOODIE-XL-F-25-VW-23-BM-HV-US	25	2270lm	2700K	90	100-245V AC	23	Black Mat	Aluminium	ON-OFF
	FLOODIE-XL-F-25-VW-23-BM-LV	25	2350lm	2700K	90	24V DC	23	Black Mat	Aluminium	DALI
	FLOODIE-XL-F-25-VW-23-BM-LV-UB	25	2350lm	2700K	90	24V DC	23	Black Mat	Aluminium	DALI
	FLOODIE-XL-F-25-VW-23-BM-LV-US	25	2350lm	2700K	90	24V DC	23	Black Mat	Aluminium	DALI
	FLOODIE-XL-F-25-VW-23-BR-HV	25	2270lm	2700K	90	100-245V AC	23	Brown Corten	Aluminium	ON-OFF
	FLOODIE-XL-F-25-VW-23-BR-LV	25	2350lm	2700K	90	24V DC	23	Brown Corten	Aluminium	DALI
	FLOODIE-XL-F-25-VW-23-GD-HV	25	2270lm	2700K	90	100-245V AC	23	Dark Grey	Aluminium	ON-OFF
	FLOODIE-XL-F-25-VW-23-GD-LV	25	2350lm	2700K	90	24V DC	23	Dark Grey	Aluminium	DALI

Niviss reserves the right to make technical changes without prior notice
product_card_20261117_053122

	FLOODIE-XL-F-25-VW-23-WM-HV	25	2270lm	2700K	90	100-245V AC	23	White Mat	Aluminium	ON-OFF
	FLOODIE-XL-F-25-VW-23-WM-LV	25	2350lm	2700K	90	24V DC	23	White Mat	Aluminium	DALI
	FLOODIE-XL-F-25-VW-36-BM-HV	25	2270lm	2700K	90	100-245V AC	36	Black Mat	Aluminium	ON-OFF
	FLOODIE-XL-F-25-VW-36-BM-HV-UB	25	2270lm	2700K	90	100-245V AC	36	Black Mat	Aluminium	ON-OFF
	FLOODIE-XL-F-25-VW-36-BM-HV-US	25	2270lm	2700K	90	100-245V AC	36	Black Mat	Aluminium	ON-OFF
	FLOODIE-XL-F-25-VW-36-BM-LV	25	2350lm	2700K	90	24V DC	36	Black Mat	Aluminium	DALI
	FLOODIE-XL-F-25-VW-36-BM-LV-UB	25	2350lm	2700K	90	24V DC	36	Black Mat	Aluminium	DALI
	FLOODIE-XL-F-25-VW-36-BM-LV-US	25	2350lm	2700K	90	24V DC	36	Black Mat	Aluminium	DALI
	FLOODIE-XL-F-25-VW-36-BR-HV	25	2270lm	2700K	90	100-245V AC	36	Brown Corten	Aluminium	ON-OFF
	FLOODIE-XL-F-25-VW-36-BR-LV	25	2350lm	2700K	90	24V DC	36	Brown Corten	Aluminium	DALI
	FLOODIE-XL-F-25-VW-36-GD-HV	25	2270lm	2700K	90	100-245V AC	36	Dark Grey	Aluminium	ON-OFF
	FLOODIE-XL-F-25-VW-36-GD-LV	25	2350lm	2700K	90	24V DC	36	Dark Grey	Aluminium	DALI
	FLOODIE-XL-F-25-VW-36-WM-HV	25	2270lm	2700K	90	100-245V AC	36	White Mat	Aluminium	ON-OFF
	FLOODIE-XL-F-25-VW-36-WM-LV	25	2350lm	2700K	90	24V DC	36	White Mat	Aluminium	DALI
	FLOODIE-XL-F-25-WW-10-BM-HV	25	2320lm	3000K	90	100-245V AC	10	Black Mat	Aluminium	ON-OFF
	FLOODIE-XL-F-25-WW-10-BM-HV-UB	25	2320lm	3000K	90	100-245V AC	10	Black Mat	Aluminium	ON-OFF
	FLOODIE-XL-F-25-WW-10-BM-HV-US	25	2320lm	3000K	90	100-245V AC	10	Black Mat	Aluminium	ON-OFF
	FLOODIE-XL-F-25-WW-10-BM-LV	25	2390lm	3000K	90	24V DC	10	Black Mat	Aluminium	DALI
	FLOODIE-XL-F-25-WW-10-BM-LV-UB	25	2390lm	3000K	90	24V DC	10	Black Mat	Aluminium	DALI
	FLOODIE-XL-F-25-WW-10-BM-LV-US	25	2390lm	3000K	90	24V DC	10	Black Mat	Aluminium	DALI
	FLOODIE-XL-F-25-WW-10-BR-HV	25	2320lm	3000K	90	100-245V AC	10	Brown Corten	Aluminium	ON-OFF
	FLOODIE-XL-F-25-WW-10-BR-LV	25	2390lm	3000K	90	24V DC	10	Brown Corten	Aluminium	DALI
	FLOODIE-XL-F-25-WW-10-GD-HV	25	2320lm	3000K	90	100-245V AC	10	Dark Grey	Aluminium	ON-OFF
	FLOODIE-XL-F-25-WW-10-GD-LV	25	2390lm	3000K	90	24V DC	10	Dark Grey	Aluminium	DALI

Niviss reserves the right to make technical changes without prior notice
product_card_20261117_053122

	FLOODIE-XL-F-25-WW-10-WM-HV	25	2320lm	3000K	90	100-245V AC	10	White Mat	Aluminium	ON-OFF
	FLOODIE-XL-F-25-WW-10-WM-LV	25	2390lm	3000K	90	24V DC	10	White Mat	Aluminium	DALI
	FLOODIE-XL-F-25-WW-23-BM-HV	25	2320lm	3000K	90	100-245V AC	23	Black Mat	Aluminium	ON-OFF
	FLOODIE-XL-F-25-WW-23-BM-HV-UB	25	2320lm	3000K	90	100-245V AC	23	Black Mat	Aluminium	ON-OFF
	FLOODIE-XL-F-25-WW-23-BM-HV-US	25	2320lm	3000K	90	100-245V AC	23	Black Mat	Aluminium	ON-OFF
	FLOODIE-XL-F-25-WW-23-BM-LV	25	2390lm	3000K	90	24V DC	23	Black Mat	Aluminium	DALI
	FLOODIE-XL-F-25-WW-23-BM-LV-UB	25	2390lm	3000K	90	24V DC	23	Black Mat	Aluminium	DALI
	FLOODIE-XL-F-25-WW-23-BM-LV-US	25	2390lm	3000K	90	24V DC	23	Black Mat	Aluminium	DALI
	FLOODIE-XL-F-25-WW-23-BR-HV	25	2320lm	3000K	90	100-245V AC	23	Brown Corten	Aluminium	ON-OFF
	FLOODIE-XL-F-25-WW-23-BR-LV	25	2390lm	3000K	90	24V DC	23	Brown Corten	Aluminium	DALI
	FLOODIE-XL-F-25-WW-23-GD-HV	25	2320lm	3000K	90	100-245V AC	23	Dark Grey	Aluminium	ON-OFF
	FLOODIE-XL-F-25-WW-23-GD-LV	25	2390lm	3000K	90	24V DC	23	Dark Grey	Aluminium	DALI
	FLOODIE-XL-F-25-WW-23-WM-HV	25	2320lm	3000K	90	100-245V AC	23	White Mat	Aluminium	ON-OFF
	FLOODIE-XL-F-25-WW-23-WM-LV	25	2390lm	3000K	90	24V DC	23	White Mat	Aluminium	DALI
	FLOODIE-XL-F-25-WW-36-BM-HV	25	2320lm	3000K	90	100-245V AC	36	Black Mat	Aluminium	ON-OFF
	FLOODIE-XL-F-25-WW-36-BM-HV-UB	25	2320lm	3000K	90	100-245V AC	36	Black Mat	Aluminium	ON-OFF
	FLOODIE-XL-F-25-WW-36-BM-HV-US	25	2320lm	3000K	90	100-245V AC	36	Black Mat	Aluminium	ON-OFF
	FLOODIE-XL-F-25-WW-36-BM-LV	25	2390lm	3000K	90	24V DC	36	Black Mat	Aluminium	DALI
	FLOODIE-XL-F-25-WW-36-BM-LV-UB	25	2390lm	3000K	90	24V DC	36	Black Mat	Aluminium	DALI
	FLOODIE-XL-F-25-WW-36-BM-LV-US	25	2390lm	3000K	90	24V DC	36	Black Mat	Aluminium	DALI
	FLOODIE-XL-F-25-WW-36-BR-HV	25	2320lm	3000K	90	100-245V AC	36	Brown Corten	Aluminium	ON-OFF
	FLOODIE-XL-F-25-WW-36-BR-LV	25	2390lm	3000K	90	24V DC	36	Brown Corten	Aluminium	DALI
	FLOODIE-XL-F-25-WW-36-GD-HV	25	2320lm	3000K	90	100-245V AC	36	Dark Grey	Aluminium	ON-OFF
	FLOODIE-XL-F-25-WW-36-GD-LV	25	2390lm	3000K	90	24V DC	36	Dark Grey	Aluminium	DALI

Niviss reserves the right to make technical changes without prior notice
product_card_20261117_053122

	FLOODIE-XL-F-25-WW-36-WM-HV	25	2320lm	3000K	90	100-245V AC	36	White Mat	Aluminium	ON-OFF
	FLOODIE-XL-F-25-WW-36-WM-LV	25	2390lm	3000K	90	24V DC	36	White Mat	Aluminium	DALI
	FLOODIE-XL-S-25-CW-10-BM-HV	25	2390lm	6000K	80	100-245V AC	10	Black Mat	Aluminium	ON-OFF
	FLOODIE-XL-S-25-CW-10-BM-HV-UB	25	2390lm	6000K	80	100-245V AC	10	Black Mat	Aluminium	ON-OFF
	FLOODIE-XL-S-25-CW-10-BM-HV-US	25	2390lm	6000K	80	100-245V AC	10	Black Mat	Aluminium	ON-OFF
	FLOODIE-XL-S-25-CW-10-BM-LV	25	2450lm	6000K	80	24V DC	10	Black Mat	Aluminium	DALI
	FLOODIE-XL-S-25-CW-10-BM-LV-UB	25	2450lm	6000K	80	24V DC	10	Black Mat	Aluminium	DALI
	FLOODIE-XL-S-25-CW-10-BM-LV-US	25	2450lm	6000K	80	24V DC	10	Black Mat	Aluminium	DALI
	FLOODIE-XL-S-25-CW-10-BR-HV	25	2390lm	6000K	80	100-245V AC	10	Brown Corten	Aluminium	ON-OFF
	FLOODIE-XL-S-25-CW-10-BR-LV	25	2450lm	6000K	80	24V DC	10	Brown Corten	Aluminium	DALI
	FLOODIE-XL-S-25-CW-10-GD-HV	25	2390lm	6000K	80	100-245V AC	10	Dark Grey	Aluminium	ON-OFF
	FLOODIE-XL-S-25-CW-10-GD-LV	25	2450lm	6000K	80	24V DC	10	Dark Grey	Aluminium	DALI
	FLOODIE-XL-S-25-CW-10-WM-HV	25	2390lm	6000K	80	100-245V AC	10	White Mat	Aluminium	ON-OFF
	FLOODIE-XL-S-25-CW-10-WM-LV	25	2450lm	6000K	80	24V DC	10	White Mat	Aluminium	DALI
	FLOODIE-XL-S-25-CW-23-BM-HV	25	2390lm	6000K	80	100-245V AC	23	Black Mat	Aluminium	ON-OFF
	FLOODIE-XL-S-25-CW-23-BM-HV-UB	25	2390lm	6000K	80	100-245V AC	23	Black Mat	Aluminium	ON-OFF
	FLOODIE-XL-S-25-CW-23-BM-HV-US	25	2390lm	6000K	80	100-245V AC	23	Black Mat	Aluminium	ON-OFF
	FLOODIE-XL-S-25-CW-23-BM-LV	25	2450lm	6000K	80	24V DC	23	Black Mat	Aluminium	DALI
	FLOODIE-XL-S-25-CW-23-BM-LV-UB	25	2450lm	6000K	80	24V DC	23	Black Mat	Aluminium	DALI
	FLOODIE-XL-S-25-CW-23-BM-LV-US	25	2450lm	6000K	80	24V DC	23	Black Mat	Aluminium	DALI
	FLOODIE-XL-S-25-CW-23-BR-HV	25	2390lm	6000K	80	100-245V AC	23	Brown Corten	Aluminium	ON-OFF
	FLOODIE-XL-S-25-CW-23-BR-LV	25	2450lm	6000K	80	24V DC	23	Brown Corten	Aluminium	DALI
	FLOODIE-XL-S-25-CW-23-GD-HV	25	2390lm	6000K	80	100-245V AC	23	Dark Grey	Aluminium	ON-OFF
	FLOODIE-XL-S-25-CW-23-GD-LV	25	2450lm	6000K	80	24V DC	23	Dark Grey	Aluminium	DALI

	FLOODIE-XL-S-25-CW-23-WM-HV	25	2390lm	6000K	80	100-245V AC	23	White Mat	Aluminium	ON-OFF
	FLOODIE-XL-S-25-CW-23-WM-LV	25	2450lm	6000K	80	24V DC	23	White Mat	Aluminium	DALI
	FLOODIE-XL-S-25-CW-36-BM-HV	25	2390lm	6000K	80	100-245V AC	36	Black Mat	Aluminium	ON-OFF
	FLOODIE-XL-S-25-CW-36-BM-HV-UB	25	2390lm	6000K	80	100-245V AC	36	Black Mat	Aluminium	ON-OFF
	FLOODIE-XL-S-25-CW-36-BM-HV-US	25	2390lm	6000K	80	100-245V AC	36	Black Mat	Aluminium	ON-OFF
	FLOODIE-XL-S-25-CW-36-BM-LV	25	2450lm	6000K	80	24V DC	36	Black Mat	Aluminium	DALI
	FLOODIE-XL-S-25-CW-36-BM-LV-UB	25	2450lm	6000K	80	24V DC	36	Black Mat	Aluminium	DALI
	FLOODIE-XL-S-25-CW-36-BM-LV-US	25	2450lm	6000K	80	24V DC	36	Black Mat	Aluminium	DALI
	FLOODIE-XL-S-25-CW-36-BR-HV	25	2390lm	6000K	80	100-245V AC	36	Brown Corten	Aluminium	ON-OFF
	FLOODIE-XL-S-25-CW-36-BR-LV	25	2450lm	6000K	80	24V DC	36	Brown Corten	Aluminium	DALI
	FLOODIE-XL-S-25-CW-36-GD-HV	25	2390lm	6000K	80	100-245V AC	36	Dark Grey	Aluminium	ON-OFF
	FLOODIE-XL-S-25-CW-36-GD-LV	25	2450lm	6000K	80	24V DC	36	Dark Grey	Aluminium	DALI
	FLOODIE-XL-S-25-CW-36-WM-HV	25	2390lm	6000K	80	100-245V AC	36	White Mat	Aluminium	ON-OFF
	FLOODIE-XL-S-25-CW-36-WM-LV	25	2450lm	6000K	80	24V DC	36	White Mat	Aluminium	DALI
	FLOODIE-XL-S-25-NW-10-BM-HV	25	2350lm	4000K	80	100-245V AC	10	Black Mat	Aluminium	ON-OFF
	FLOODIE-XL-S-25-NW-10-BM-HV-UB	25	2350lm	4000K	80	100-245V AC	10	Black Mat	Aluminium	ON-OFF
	FLOODIE-XL-S-25-NW-10-BM-HV-US	25	2350lm	4000K	80	100-245V AC	10	Black Mat	Aluminium	ON-OFF
	FLOODIE-XL-S-25-NW-10-BM-LV	25	2410lm	4000K	80	24V DC	10	Black Mat	Aluminium	DALI
	FLOODIE-XL-S-25-NW-10-BM-LV-UB	25	2410lm	4000K	80	24V DC	10	Black Mat	Aluminium	DALI
	FLOODIE-XL-S-25-NW-10-BM-LV-US	25	2410lm	4000K	80	24V DC	10	Black Mat	Aluminium	DALI
	FLOODIE-XL-S-25-NW-10-BR-HV	25	2350lm	4000K	80	100-245V AC	10	Brown Corten	Aluminium	ON-OFF
	FLOODIE-XL-S-25-NW-10-BR-LV	25	2410lm	4000K	80	24V DC	10	Brown Corten	Aluminium	DALI
	FLOODIE-XL-S-25-NW-10-GD-HV	25	2350lm	4000K	80	100-245V AC	10	Dark Grey	Aluminium	ON-OFF
	FLOODIE-XL-S-25-NW-10-GD-LV	25	2410lm	4000K	80	24V DC	10	Dark Grey	Aluminium	DALI

Niviss reserves the right to make technical changes without prior notice
product_card_20261117_053122

	FLOODIE-XL-S-25-NW-10-WM-HV	25	2350lm	4000K	80	100-245V AC	10	White Mat	Aluminium	ON-OFF
	FLOODIE-XL-S-25-NW-10-WM-LV	25	2410lm	4000K	80	24V DC	10	White Mat	Aluminium	DALI
	FLOODIE-XL-S-25-NW-23-BM-HV	25	2350lm	4000K	80	100-245V AC	23	Black Mat	Aluminium	ON-OFF
	FLOODIE-XL-S-25-NW-23-BM-HV-UB	25	2350lm	4000K	80	100-245V AC	23	Black Mat	Aluminium	ON-OFF
	FLOODIE-XL-S-25-NW-23-BM-HV-US	25	2350lm	4000K	80	100-245V AC	23	Black Mat	Aluminium	ON-OFF
	FLOODIE-XL-S-25-NW-23-BM-LV	25	2410lm	4000K	80	24V DC	23	Black Mat	Aluminium	DALI
	FLOODIE-XL-S-25-NW-23-BM-LV-UB	25	2410lm	4000K	80	24V DC	23	Black Mat	Aluminium	DALI
	FLOODIE-XL-S-25-NW-23-BM-LV-US	25	2410lm	4000K	80	24V DC	23	Black Mat	Aluminium	DALI
	FLOODIE-XL-S-25-NW-23-BR-HV	25	2350lm	4000K	80	100-245V AC	23	Brown Corten	Aluminium	ON-OFF
	FLOODIE-XL-S-25-NW-23-BR-LV	25	2410lm	4000K	80	24V DC	23	Brown Corten	Aluminium	DALI
	FLOODIE-XL-S-25-NW-23-GD-HV	25	2350lm	4000K	80	100-245V AC	23	Dark Grey	Aluminium	ON-OFF
	FLOODIE-XL-S-25-NW-23-GD-LV	25	2410lm	4000K	80	24V DC	23	Dark Grey	Aluminium	DALI
	FLOODIE-XL-S-25-NW-23-WM-HV	25	2350lm	4000K	80	100-245V AC	23	White Mat	Aluminium	ON-OFF
	FLOODIE-XL-S-25-NW-23-WM-LV	25	2410lm	4000K	80	24V DC	23	White Mat	Aluminium	DALI
	FLOODIE-XL-S-25-NW-36-BM-HV	25	2350lm	4000K	80	100-245V AC	36	Black Mat	Aluminium	ON-OFF
	FLOODIE-XL-S-25-NW-36-BM-HV-UB	25	2350lm	4000K	80	100-245V AC	36	Black Mat	Aluminium	ON-OFF
	FLOODIE-XL-S-25-NW-36-BM-HV-US	25	2350lm	4000K	80	100-245V AC	36	Black Mat	Aluminium	ON-OFF
	FLOODIE-XL-S-25-NW-36-BM-LV	25	2410lm	4000K	80	24V DC	36	Black Mat	Aluminium	DALI
	FLOODIE-XL-S-25-NW-36-BM-LV-UB	25	2410lm	4000K	80	24V DC	36	Black Mat	Aluminium	DALI
	FLOODIE-XL-S-25-NW-36-BM-LV-US	25	2410lm	4000K	80	24V DC	36	Black Mat	Aluminium	DALI
	FLOODIE-XL-S-25-NW-36-BR-HV	25	2350lm	4000K	80	100-245V AC	36	Brown Corten	Aluminium	ON-OFF
	FLOODIE-XL-S-25-NW-36-BR-LV	25	2410lm	4000K	80	24V DC	36	Brown Corten	Aluminium	DALI
	FLOODIE-XL-S-25-NW-36-GD-HV	25	2350lm	4000K	80	100-245V AC	36	Dark Grey	Aluminium	ON-OFF
	FLOODIE-XL-S-25-NW-36-GD-LV	25	2410lm	4000K	80	24V DC	36	Dark Grey	Aluminium	DALI

Niviss reserves the right to make technical changes without prior notice
product_card_20261117_053122

	FLOODIE-XL-S-25-NW-36-WM-HV	25	2350lm	4000K	80	100-245V AC	36	White Mat	Aluminium	ON-OFF
	FLOODIE-XL-S-25-NW-36-WM-LV	25	2410lm	4000K	80	24V DC	36	White Mat	Aluminium	DALI
	FLOODIE-XL-S-25-VW-10-BM-HV	25	2270lm	2700K	90	100-245V AC	10	Black Mat	Aluminium	ON-OFF
	FLOODIE-XL-S-25-VW-10-BM-HV-UB	25	2270lm	2700K	90	100-245V AC	10	Black Mat	Aluminium	ON-OFF
	FLOODIE-XL-S-25-VW-10-BM-HV-US	25	2270lm	2700K	90	100-245V AC	10	Black Mat	Aluminium	ON-OFF
	FLOODIE-XL-S-25-VW-10-BM-LV	25	2350lm	2700K	90	24V DC	10	Black Mat	Aluminium	DALI
	FLOODIE-XL-S-25-VW-10-BM-LV-UB	25	2350lm	2700K	90	24V DC	10	Black Mat	Aluminium	DALI
	FLOODIE-XL-S-25-VW-10-BM-LV-US	25	2350lm	2700K	90	24V DC	10	Black Mat	Aluminium	DALI
	FLOODIE-XL-S-25-VW-10-BR-HV	25	2270lm	2700K	90	100-245V AC	10	Brown Corten	Aluminium	ON-OFF
	FLOODIE-XL-S-25-VW-10-BR-LV	25	2350lm	2700K	90	24V DC	10	Brown Corten	Aluminium	DALI
	FLOODIE-XL-S-25-VW-10-GD-HV	25	2270lm	2700K	90	100-245V AC	10	Dark Grey	Aluminium	ON-OFF
	FLOODIE-XL-S-25-VW-10-GD-LV	25	2350lm	2700K	90	24V DC	10	Dark Grey	Aluminium	DALI
	FLOODIE-XL-S-25-VW-10-WM-HV	25	2270lm	2700K	90	100-245V AC	10	White Mat	Aluminium	ON-OFF
	FLOODIE-XL-S-25-VW-10-WM-LV	25	2350lm	2700K	90	24V DC	10	White Mat	Aluminium	DALI
	FLOODIE-XL-S-25-VW-23-BM-HV	25	2270lm	2700K	90	100-245V AC	23	Black Mat	Aluminium	ON-OFF
	FLOODIE-XL-S-25-VW-23-BM-HV-UB	25	2270lm	2700K	90	100-245V AC	23	Black Mat	Aluminium	ON-OFF
	FLOODIE-XL-S-25-VW-23-BM-HV-US	25	2270lm	2700K	90	100-245V AC	23	Black Mat	Aluminium	ON-OFF
	FLOODIE-XL-S-25-VW-23-BM-LV	25	2350lm	2700K	90	24V DC	23	Black Mat	Aluminium	DALI
	FLOODIE-XL-S-25-VW-23-BM-LV-UB	25	2350lm	2700K	90	24V DC	23	Black Mat	Aluminium	DALI
	FLOODIE-XL-S-25-VW-23-BM-LV-US	25	2350lm	2700K	90	24V DC	23	Black Mat	Aluminium	DALI
	FLOODIE-XL-S-25-VW-23-BR-HV	25	2270lm	2700K	90	100-245V AC	23	Brown Corten	Aluminium	ON-OFF
	FLOODIE-XL-S-25-VW-23-BR-LV	25	2350lm	2700K	90	24V DC	23	Brown Corten	Aluminium	DALI
	FLOODIE-XL-S-25-VW-23-GD-HV	25	2270lm	2700K	90	100-245V AC	23	Dark Grey	Aluminium	ON-OFF
	FLOODIE-XL-S-25-VW-23-GD-LV	25	2350lm	2700K	90	24V DC	23	Dark Grey	Aluminium	DALI

Niviss reserves the right to make technical changes without prior notice
product_card_20261117_053122

	FLOODIE-XL-S-25-VW-23-WM-HV	25	2270lm	2700K	90	100-245V AC	23	White Mat	Aluminium	ON-OFF
	FLOODIE-XL-S-25-VW-23-WM-LV	25	2350lm	2700K	90	24V DC	23	White Mat	Aluminium	DALI
	FLOODIE-XL-S-25-VW-36-BM-HV	25	2270lm	2700K	90	100-245V AC	36	Black Mat	Aluminium	ON-OFF
	FLOODIE-XL-S-25-VW-36-BM-HV-UB	25	2270lm	2700K	90	100-245V AC	36	Black Mat	Aluminium	ON-OFF
	FLOODIE-XL-S-25-VW-36-BM-HV-US	25	2270lm	2700K	90	100-245V AC	36	Black Mat	Aluminium	ON-OFF
	FLOODIE-XL-S-25-VW-36-BM-LV	25	2350lm	2700K	90	24V DC	36	Black Mat	Aluminium	DALI
	FLOODIE-XL-S-25-VW-36-BM-LV-UB	25	2350lm	2700K	90	24V DC	36	Black Mat	Aluminium	DALI
	FLOODIE-XL-S-25-VW-36-BM-LV-US	25	2350lm	2700K	90	24V DC	36	Black Mat	Aluminium	DALI
	FLOODIE-XL-S-25-VW-36-BR-HV	25	2270lm	2700K	90	100-245V AC	36	Brown Corten	Aluminium	ON-OFF
	FLOODIE-XL-S-25-VW-36-BR-LV	25	2350lm	2700K	90	24V DC	36	Brown Corten	Aluminium	DALI
	FLOODIE-XL-S-25-VW-36-GD-HV	25	2270lm	2700K	90	100-245V AC	36	Dark Grey	Aluminium	ON-OFF
	FLOODIE-XL-S-25-VW-36-GD-LV	25	2350lm	2700K	90	24V DC	36	Dark Grey	Aluminium	DALI
	FLOODIE-XL-S-25-VW-36-WM-HV	25	2270lm	2700K	90	100-245V AC	36	White Mat	Aluminium	ON-OFF
	FLOODIE-XL-S-25-VW-36-WM-LV	25	2350lm	2700K	90	24V DC	36	White Mat	Aluminium	DALI
	FLOODIE-XL-S-25-WW-10-BM-HV	25	2320lm	3000K	90	100-245V AC	10	Black Mat	Aluminium	ON-OFF
	FLOODIE-XL-S-25-WW-10-BM-HV-UB	25	2320lm	3000K	90	100-245V AC	10	Black Mat	Aluminium	ON-OFF
	FLOODIE-XL-S-25-WW-10-BM-HV-US	25	2320lm	3000K	90	100-245V AC	10	Black Mat	Aluminium	ON-OFF
	FLOODIE-XL-S-25-WW-10-BM-LV	25	2390lm	3000K	90	24V DC	10	Black Mat	Aluminium	DALI
	FLOODIE-XL-S-25-WW-10-BM-LV-UB	25	2390lm	3000K	90	24V DC	10	Black Mat	Aluminium	DALI
	FLOODIE-XL-S-25-WW-10-BM-LV-US	25	2390lm	3000K	90	24V DC	10	Black Mat	Aluminium	DALI
	FLOODIE-XL-S-25-WW-10-BR-HV	25	2320lm	3000K	90	100-245V AC	10	Brown Corten	Aluminium	ON-OFF
	FLOODIE-XL-S-25-WW-10-BR-LV	25	2390lm	3000K	90	24V DC	10	Brown Corten	Aluminium	DALI
	FLOODIE-XL-S-25-WW-10-GD-HV	25	2320lm	3000K	90	100-245V AC	10	Dark Grey	Aluminium	ON-OFF
	FLOODIE-XL-S-25-WW-10-GD-LV	25	2390lm	3000K	90	24V DC	10	Dark Grey	Aluminium	DALI

	FLOODIE-XL-S-25-WW-10-WM-HV	25	2320lm	3000K	90	100-245V AC	10	White Mat	Aluminium	ON-OFF
	FLOODIE-XL-S-25-WW-10-WM-LV	25	2390lm	3000K	90	24V DC	10	White Mat	Aluminium	DALI
	FLOODIE-XL-S-25-WW-23-BM-HV	25	2320lm	3000K	90	100-245V AC	23	Black Mat	Aluminium	ON-OFF
	FLOODIE-XL-S-25-WW-23-BM-HV-UB	25	2320lm	3000K	90	100-245V AC	23	Black Mat	Aluminium	ON-OFF
	FLOODIE-XL-S-25-WW-23-BM-HV-US	25	2320lm	3000K	90	100-245V AC	23	Black Mat	Aluminium	ON-OFF
	FLOODIE-XL-S-25-WW-23-BM-LV	25	2390lm	3000K	90	24V DC	23	Black Mat	Aluminium	DALI
	FLOODIE-XL-S-25-WW-23-BM-LV-UB	25	2390lm	3000K	90	24V DC	23	Black Mat	Aluminium	DALI
	FLOODIE-XL-S-25-WW-23-BM-LV-US	25	2390lm	3000K	90	24V DC	23	Black Mat	Aluminium	DALI
	FLOODIE-XL-S-25-WW-23-BR-HV	25	2320lm	3000K	90	100-245V AC	23	Brown Corten	Aluminium	ON-OFF
	FLOODIE-XL-S-25-WW-23-BR-LV	25	2390lm	3000K	90	24V DC	23	Brown Corten	Aluminium	DALI
	FLOODIE-XL-S-25-WW-23-GD-HV	25	2320lm	3000K	90	100-245V AC	23	Dark Grey	Aluminium	ON-OFF
	FLOODIE-XL-S-25-WW-23-GD-LV	25	2390lm	3000K	90	24V DC	23	Dark Grey	Aluminium	DALI
	FLOODIE-XL-S-25-WW-23-WM-HV	25	2320lm	3000K	90	100-245V AC	23	White Mat	Aluminium	ON-OFF
	FLOODIE-XL-S-25-WW-23-WM-LV	25	2390lm	3000K	90	24V DC	23	White Mat	Aluminium	DALI
	FLOODIE-XL-S-25-WW-36-BM-HV	25	2320lm	3000K	90	100-245V AC	36	Black Mat	Aluminium	ON-OFF
	FLOODIE-XL-S-25-WW-36-BM-HV-UB	25	2320lm	3000K	90	100-245V AC	36	Black Mat	Aluminium	ON-OFF
	FLOODIE-XL-S-25-WW-36-BM-HV-US	25	2320lm	3000K	90	100-245V AC	36	Black Mat	Aluminium	ON-OFF
	FLOODIE-XL-S-25-WW-36-BM-LV	25	2390lm	3000K	90	24V DC	36	Black Mat	Aluminium	DALI
	FLOODIE-XL-S-25-WW-36-BM-LV-UB	25	2390lm	3000K	90	24V DC	36	Black Mat	Aluminium	DALI
	FLOODIE-XL-S-25-WW-36-BM-LV-US	25	2390lm	3000K	90	24V DC	36	Black Mat	Aluminium	DALI
	FLOODIE-XL-S-25-WW-36-BR-HV	25	2320lm	3000K	90	100-245V AC	36	Brown Corten	Aluminium	ON-OFF
	FLOODIE-XL-S-25-WW-36-BR-LV	25	2390lm	3000K	90	24V DC	36	Brown Corten	Aluminium	DALI
	FLOODIE-XL-S-25-WW-36-GD-HV	25	2320lm	3000K	90	100-245V AC	36	Dark Grey	Aluminium	ON-OFF
	FLOODIE-XL-S-25-WW-36-GD-LV	25	2390lm	3000K	90	24V DC	36	Dark Grey	Aluminium	DALI

Niviss reserves the right to make technical changes without prior notice
product_card_20261117_053122

	FLOODIE-XL-S-25-WW-36-WM-HV	25	2320lm	3000K	90	100-245V AC	36	White Mat	Aluminium	ON-OFF
	FLOODIE-XL-S-25-WW-36-WM-LV	25	2390lm	3000K	90	24V DC	36	White Mat	Aluminium	DALI

OGÓLNE WARUNKI UŻYTKOWANIA

- Przed użyciem oprawy świetlnej należy upewnić się na jaki zakres napięć jest ona przeznaczona.
- Podłączenie do zasilania należy wykonać przy wyłączonym zasilaniu.
- Korzystać z odpowiednich gniazdek i wtyczek. Należy upewnić się, że gniazdka i wtyczki elektryczne są zgodne z napięciem i typem oprawy świetlnej.
- Stosować odpowiednie okablowanie do opraw świetlnych.
- Unikać przeciążenia obwodów elektrycznych, nie podłączając zbyt wielu opraw świetlnych do jednego gniazdka lub obwodu. Przed użyciem należy sprawdzić stan przewodu zasilającego i wtyczki pod kątem uszkodzeń lub zużycia.
- Podczas podłączenia oprawy świetlnej należy zwrócić uwagę na prawidłową polaryzację. Niewłaściwa polaryzacja może uniemożliwić prawidłowe działanie opraw świetlnych lub spowodować ich uszkodzenie.
- Montażu opraw świetlnych powinna dokonać osoba wykwalifikowana.
- Należy utrzymywać oprawy świetlne w czystości. Zanieczyszczenia i kurz mogą mieć negatywny wpływ na ich działanie.
- Postępować zgodnie z powyższym schematem podłączenia oprawy.
- Unikać bezpośredniej ekspozycji oczu na jasne źródło światła. Należy ustawić oprawy świetlne w sposób, który minimalizuje bezpośrednie naświetlenie oczu i/lub niekomfortowy poziom jasności.
- Upewnić się, że oprawa jest ustawiona na stabilnej powierzchni i trzymana z dala od materiałów łatwopalnych. Należy pozostawić wystarczającą ilość miejsca wokół oprawy, aby zapobiec przegrzaniu.
- Przechowywać z dala od ognia.

UWAGA DOTYCZĄCA ŚRODOWISKA!

Zabrania się wyrzucania przestarzałego i zużytego sprzętu elektrycznego i elektronicznego razem ze zwykłymi odpadami domowymi. Należy je odpowiednio posegregować i poddać recyklingowi. Stary sprzęt elektroniczny i elektryczny należy zwrócić do punktu zbiórki odpadów wyznaczonego przez firmę zajmującą się gospodarką odpadami. Zużyty sprzęt elektryczny i elektroniczny zostanie rozdzielony na materiały bazowe, które następnie zostaną poddane recyklingowi. Aby uzyskać więcej informacji na temat gospodarki odpadami, skontaktuj się z lokalnymi władzami, służbami zajmującymi się gospodarką odpadami lub sprzedawcą sprzętu elektronicznego i elektrycznego.