FLOODIE-S

Floodie S — kompaktowy reflektor z kolekcji Floodie, stworzony do subtelnego podkreślania detali architektonicznych i niewielkich powierzchni.



Obudowa	Aluminium
Rodzaj szkła	Hartowane
Źródło światła	LED Module (replaceable)
Tolerancja strumienia świetlnego	10%
Tolerancja barwowa SDCM	<3
Rozsył światła / Emisja	symetryczny / bezpośredni
Klasa szczelności IP	IP67
Odporność na uderzenia	IK06
Zakres temperatury pracy	-35°C ÷ +65°C
Żywotność L80B10	>75 000h
Klasa ochronności	HV: I; LV: III
Okablowanie	HV: H07RN-F 3G1 / LV: H07RN-F 2X1.5
Podłączenie	1m
Ściemnianie	LV: DALI / DALI2; HV: ON-OFF / TRIAC (on request)
Zasilacze	wbudowany
Kąt rozsyłu	15, 24, 36, 60
Moc znamionowa [W]	6
Strumień świetlny [lm]	490-570lm
Rodzaj zasilania	HV: 100-245V AC 50/60Hz ; LV: 24V DC
CRI	>90 / >80

Dostępne wersje



CONTACT: +48 58 781 33 99 sales@niviss.com www.niviss.com

Niviss reserves the right to make technical changes without prior notice
product_card_20261117_053126

Akcesoria



FLOODIE-SPIKE-44-205-M6x10MM



FLOODIE-BASE-xx-80-31



FLOODIE-S-BASE-xx-48-10



FLOODIE-POLE-S-xx-yy



FLOODIE-POLE-B-xx-yy



FLOODIE-TREE-BELT-S-yy



FLOODIE-TREE-BELT-N-yy



Honeycomb

Wymiary

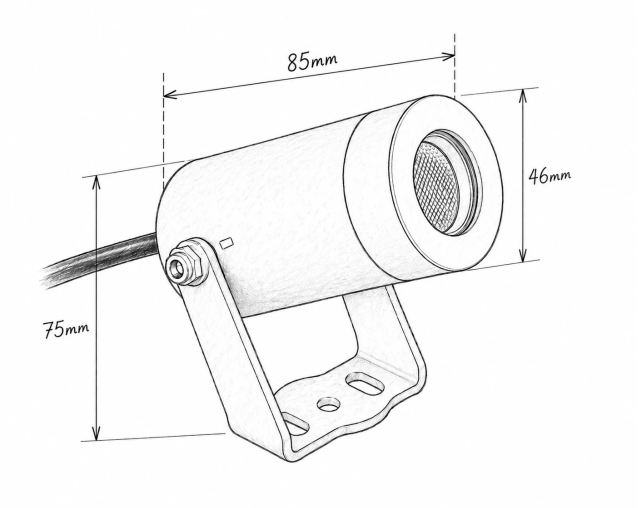

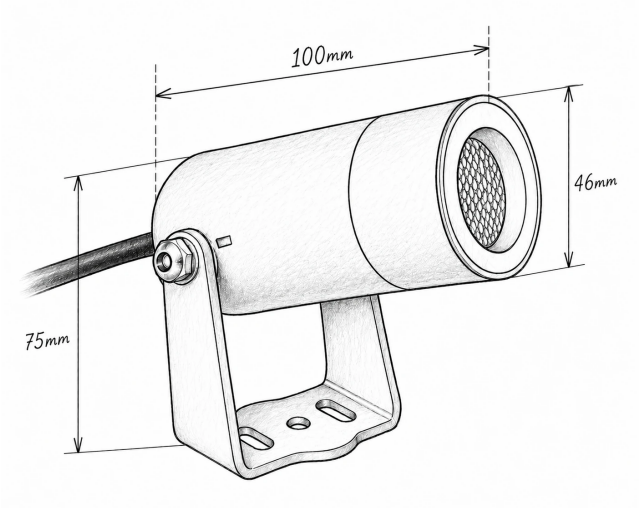

Niviss reserves the right to make technical changes without prior notice
product_card_20261117_053126

Lista wariantów

Zdjęcie	Indeks	[W]	[LM]	[K]	CRI/Ra>	Rodzaj zasilania	Kąt	Malowanie	Obudowa	Ściemnianie
	FLOODIE-S-F-6-CW-15-BM-HV	6	545lm	6000K	90	100-245V AC	15	Black Mat	Aluminium	ON-OFF
	FLOODIE-S-F-6-CW-15-BM-HV-UB	6	545lm	6000K	90	100-245V AC	15	Black Mat	Aluminium	ON-OFF
	FLOODIE-S-F-6-CW-15-BM-HV-US	6	545lm	6000K	90	100-245V AC	15	Black Mat	Aluminium	ON-OFF
	FLOODIE-S-F-6-CW-15-BM-LV	6	570lm	6000K	90	24V DC	15	Black Mat	Aluminium	DALI
	FLOODIE-S-F-6-CW-15-BM-LV-UB	6	570lm	6000K	90	24V DC	15	Black Mat	Aluminium	DALI
	FLOODIE-S-F-6-CW-15-BM-LV-US	6	570lm	6000K	90	24V DC	15	Black Mat	Aluminium	DALI
	FLOODIE-S-F-6-CW-15-BR-HV	6	545lm	6000K	90	100-245V AC	15	Brown Corten	Aluminium	ON-OFF
	FLOODIE-S-F-6-CW-15-BR-LV	6	570lm	6000K	90	24V DC	15	Brown Corten	Aluminium	DALI
	FLOODIE-S-F-6-CW-15-GD-HV	6	545lm	6000K	90	100-245V AC	15	Dark Grey	Aluminium	ON-OFF
	FLOODIE-S-F-6-CW-15-GD-LV	6	570lm	6000K	90	24V DC	15	Dark Grey	Aluminium	DALI
	FLOODIE-S-F-6-CW-15-WM-HV	6	545lm	6000K	90	100-245V AC	15	White Mat	Aluminium	ON-OFF
	FLOODIE-S-F-6-CW-15-WM-LV	6	570lm	6000K	90	24V DC	15	White Mat	Aluminium	DALI
	FLOODIE-S-F-6-CW-24-BM-HV	6	545lm	6000K	90	100-245V AC	24	Black Mat	Aluminium	ON-OFF
	FLOODIE-S-F-6-CW-24-BM-HV-UB	6	545lm	6000K	90	100-245V AC	24	Black Mat	Aluminium	ON-OFF
	FLOODIE-S-F-6-CW-24-BM-HV-US	6	545lm	6000K	90	100-245V AC	24	Black Mat	Aluminium	ON-OFF
	FLOODIE-S-F-6-CW-24-BM-LV	6	570lm	6000K	90	24V DC	24	Black Mat	Aluminium	DALI
	FLOODIE-S-F-6-CW-24-BM-LV-UB	6	570lm	6000K	90	24V DC	24	Black Mat	Aluminium	DALI
	FLOODIE-S-F-6-CW-24-BM-LV-US	6	570lm	6000K	90	24V DC	24	Black Mat	Aluminium	DALI
	FLOODIE-S-F-6-CW-24-BR-HV	6	545lm	6000K	90	100-245V AC	24	Brown Corten	Aluminium	ON-OFF
	FLOODIE-S-F-6-CW-24-BR-LV	6	570lm	6000K	90	24V DC	24	Brown Corten	Aluminium	DALI
	FLOODIE-S-F-6-CW-24-GD-HV	6	545lm	6000K	90	100-245V AC	24	Dark Grey	Aluminium	ON-OFF
	FLOODIE-S-F-6-CW-24-GD-LV	6	570lm	6000K	90	24V DC	24	Dark Grey	Aluminium	DALI

Niviss reserves the right to make technical changes without prior notice
product_card_20261117_053126

	FLOODIE-S-F-6-CW-24-WM-HV	6	545lm	6000K	90	100-245V AC	24	White Mat	Aluminium	ON-OFF
	FLOODIE-S-F-6-CW-24-WM-LV	6	570lm	6000K	90	24V DC	24	White Mat	Aluminium	DALI
	FLOODIE-S-F-6-CW-36-BM-HV	6	545lm	6000K	90	100-245V AC	36	Black Mat	Aluminium	ON-OFF
	FLOODIE-S-F-6-CW-36-BM-HV-UB	6	545lm	6000K	90	100-245V AC	36	Black Mat	Aluminium	ON-OFF
	FLOODIE-S-F-6-CW-36-BM-HV-US	6	545lm	6000K	90	100-245V AC	36	Black Mat	Aluminium	ON-OFF
	FLOODIE-S-F-6-CW-36-BM-LV	6	570lm	6000K	90	24V DC	36	Black Mat	Aluminium	DALI
	FLOODIE-S-F-6-CW-36-BM-LV-UB	6	570lm	6000K	90	24V DC	36	Black Mat	Aluminium	DALI
	FLOODIE-S-F-6-CW-36-BM-LV-US	6	570lm	6000K	90	24V DC	36	Black Mat	Aluminium	DALI
	FLOODIE-S-F-6-CW-36-BR-HV	6	545lm	6000K	90	100-245V AC	36	Brown Corten	Aluminium	ON-OFF
	FLOODIE-S-F-6-CW-36-BR-LV	6	570lm	6000K	90	24V DC	36	Brown Corten	Aluminium	DALI
	FLOODIE-S-F-6-CW-36-GD-HV	6	545lm	6000K	90	100-245V AC	36	Dark Grey	Aluminium	ON-OFF
	FLOODIE-S-F-6-CW-36-GD-LV	6	570lm	6000K	90	24V DC	36	Dark Grey	Aluminium	DALI
	FLOODIE-S-F-6-CW-36-WM-HV	6	545lm	6000K	90	100-245V AC	36	White Mat	Aluminium	ON-OFF
	FLOODIE-S-F-6-CW-36-WM-LV	6	570lm	6000K	90	24V DC	36	White Mat	Aluminium	DALI
	FLOODIE-S-F-6-CW-60-BM-HV	6	545lm	6000K	90	100-245V AC	60	Black Mat	Aluminium	ON-OFF
	FLOODIE-S-F-6-CW-60-BM-HV-UB	6	545lm	6000K	90	100-245V AC	60	Black Mat	Aluminium	ON-OFF
	FLOODIE-S-F-6-CW-60-BM-HV-US	6	545lm	6000K	90	100-245V AC	60	Black Mat	Aluminium	ON-OFF
	FLOODIE-S-F-6-CW-60-BM-LV	6	570lm	6000K	90	24V DC	60	Black Mat	Aluminium	DALI
	FLOODIE-S-F-6-CW-60-BM-LV-UB	6	570lm	6000K	90	24V DC	60	Black Mat	Aluminium	DALI
	FLOODIE-S-F-6-CW-60-BM-LV-US	6	570lm	6000K	90	24V DC	60	Black Mat	Aluminium	DALI
	FLOODIE-S-F-6-CW-60-BR-HV	6	545lm	6000K	90	100-245V AC	60	Brown Corten	Aluminium	ON-OFF
	FLOODIE-S-F-6-CW-60-BR-LV	6	570lm	6000K	90	24V DC	60	Brown Corten	Aluminium	DALI
	FLOODIE-S-F-6-CW-60-GD-HV	6	545lm	6000K	90	100-245V AC	60	Dark Grey	Aluminium	ON-OFF
	FLOODIE-S-F-6-CW-60-GD-LV	6	570lm	6000K	90	24V DC	60	Dark Grey	Aluminium	DALI

Niviss reserves the right to make technical changes without prior notice
product_card_20261117_053126

	FLOODIE-S-F-6-CW-60-WM-HV	6	545lm	6000K	90	100-245V AC	60	White Mat	Aluminium	ON-OFF
	FLOODIE-S-F-6-CW-60-WM-LV	6	570lm	6000K	90	24V DC	60	White Mat	Aluminium	DALI
	FLOODIE-S-F-6-NW-15-BM-HV	6	530lm	4000K	90	100-245V AC	15	Black Mat	Aluminium	ON-OFF
	FLOODIE-S-F-6-NW-15-BM-HV-UB	6	530lm	4000K	90	100-245V AC	15	Black Mat	Aluminium	ON-OFF
	FLOODIE-S-F-6-NW-15-BM-HV-US	6	530lm	4000K	90	100-245V AC	15	Black Mat	Aluminium	ON-OFF
	FLOODIE-S-F-6-NW-15-BM-LV	6	550lm	4000K	90	24V DC	15	Black Mat	Aluminium	DALI
	FLOODIE-S-F-6-NW-15-BM-LV-UB	6	550lm	4000K	90	24V DC	15	Black Mat	Aluminium	DALI
	FLOODIE-S-F-6-NW-15-BM-LV-US	6	550lm	4000K	90	24V DC	15	Black Mat	Aluminium	DALI
	FLOODIE-S-F-6-NW-15-BR-HV	6	530lm	4000K	90	100-245V AC	15	Brown Corten	Aluminium	ON-OFF
	FLOODIE-S-F-6-NW-15-BR-LV	6	550lm	4000K	90	24V DC	15	Brown Corten	Aluminium	DALI
	FLOODIE-S-F-6-NW-15-GD-HV	6	530lm	4000K	90	100-245V AC	15	Dark Grey	Aluminium	ON-OFF
	FLOODIE-S-F-6-NW-15-GD-LV	6	550lm	4000K	90	24V DC	15	Dark Grey	Aluminium	DALI
	FLOODIE-S-F-6-NW-15-WM-HV	6	530lm	4000K	90	100-245V AC	15	White Mat	Aluminium	ON-OFF
	FLOODIE-S-F-6-NW-15-WM-LV	6	550lm	4000K	90	24V DC	15	White Mat	Aluminium	DALI
	FLOODIE-S-F-6-NW-24-BM-HV	6	530lm	4000K	90	100-245V AC	24	Black Mat	Aluminium	ON-OFF
	FLOODIE-S-F-6-NW-24-BM-HV-UB	6	530lm	4000K	90	100-245V AC	24	Black Mat	Aluminium	ON-OFF
	FLOODIE-S-F-6-NW-24-BM-HV-US	6	530lm	4000K	90	100-245V AC	24	Black Mat	Aluminium	ON-OFF
	FLOODIE-S-F-6-NW-24-BM-LV	6	550lm	4000K	90	24V DC	24	Black Mat	Aluminium	DALI
	FLOODIE-S-F-6-NW-24-BM-LV-UB	6	550lm	4000K	90	24V DC	24	Black Mat	Aluminium	DALI
	FLOODIE-S-F-6-NW-24-BM-LV-US	6	550lm	4000K	90	24V DC	24	Black Mat	Aluminium	DALI
	FLOODIE-S-F-6-NW-24-BR-HV	6	530lm	4000K	90	100-245V AC	24	Brown Corten	Aluminium	ON-OFF
	FLOODIE-S-F-6-NW-24-BR-LV	6	550lm	4000K	90	24V DC	24	Brown Corten	Aluminium	DALI
	FLOODIE-S-F-6-NW-24-GD-HV	6	530lm	4000K	90	100-245V AC	24	Dark Grey	Aluminium	ON-OFF
	FLOODIE-S-F-6-NW-24-GD-LV	6	550lm	4000K	90	24V DC	24	Dark Grey	Aluminium	DALI

Niviss reserves the right to make technical changes without prior notice
product_card_20261117_053126

	FLOODIE-S-F-6-NW-24-WM-HV	6	530lm	4000K	90	100-245V AC	24	White Mat	Aluminium	ON-OFF
	FLOODIE-S-F-6-NW-24-WM-LV	6	550lm	4000K	90	24V DC	24	White Mat	Aluminium	DALI
	FLOODIE-S-F-6-NW-36-BM-HV	6	530lm	4000K	90	100-245V AC	36	Black Mat	Aluminium	ON-OFF
	FLOODIE-S-F-6-NW-36-BM-HV-UB	6	530lm	4000K	90	100-245V AC	36	Black Mat	Aluminium	ON-OFF
	FLOODIE-S-F-6-NW-36-BM-HV-US	6	530lm	4000K	90	100-245V AC	36	Black Mat	Aluminium	ON-OFF
	FLOODIE-S-F-6-NW-36-BM-LV	6	550lm	4000K	90	24V DC	36	Black Mat	Aluminium	DALI
	FLOODIE-S-F-6-NW-36-BM-LV-UB	6	550lm	4000K	90	24V DC	36	Black Mat	Aluminium	DALI
	FLOODIE-S-F-6-NW-36-BM-LV-US	6	550lm	4000K	90	24V DC	36	Black Mat	Aluminium	DALI
	FLOODIE-S-F-6-NW-36-BR-HV	6	530lm	4000K	90	100-245V AC	36	Brown Corten	Aluminium	ON-OFF
	FLOODIE-S-F-6-NW-36-BR-LV	6	550lm	4000K	90	24V DC	36	Brown Corten	Aluminium	DALI
	FLOODIE-S-F-6-NW-36-GD-HV	6	530lm	4000K	90	100-245V AC	36	Dark Grey	Aluminium	ON-OFF
	FLOODIE-S-F-6-NW-36-GD-LV	6	550lm	4000K	90	24V DC	36	Dark Grey	Aluminium	DALI
	FLOODIE-S-F-6-NW-36-WM-HV	6	530lm	4000K	90	100-245V AC	36	White Mat	Aluminium	ON-OFF
	FLOODIE-S-F-6-NW-36-WM-LV	6	550lm	4000K	90	24V DC	36	White Mat	Aluminium	DALI
	FLOODIE-S-F-6-NW-60-BM-HV	6	530lm	4000K	90	100-245V AC	60	Black Mat	Aluminium	ON-OFF
	FLOODIE-S-F-6-NW-60-BM-HV-UB	6	530lm	4000K	90	100-245V AC	60	Black Mat	Aluminium	ON-OFF
	FLOODIE-S-F-6-NW-60-BM-HV-US	6	530lm	4000K	90	100-245V AC	60	Black Mat	Aluminium	ON-OFF
	FLOODIE-S-F-6-NW-60-BM-LV	6	550lm	4000K	90	24V DC	60	Black Mat	Aluminium	DALI
	FLOODIE-S-F-6-NW-60-BM-LV-UB	6	550lm	4000K	90	24V DC	60	Black Mat	Aluminium	DALI
	FLOODIE-S-F-6-NW-60-BM-LV-US	6	550lm	4000K	90	24V DC	60	Black Mat	Aluminium	DALI
	FLOODIE-S-F-6-NW-60-BR-HV	6	530lm	4000K	90	100-245V AC	60	Brown Corten	Aluminium	ON-OFF
	FLOODIE-S-F-6-NW-60-BR-LV	6	550lm	4000K	90	24V DC	60	Brown Corten	Aluminium	DALI
	FLOODIE-S-F-6-NW-60-GD-HV	6	530lm	4000K	90	100-245V AC	60	Dark Grey	Aluminium	ON-OFF
	FLOODIE-S-F-6-NW-60-GD-LV	6	550lm	4000K	90	24V DC	60	Dark Grey	Aluminium	DALI

Niviss reserves the right to make technical changes without prior notice
product_card_20261117_053126

	FLOODIE-S-F-6-NW-60-WM-HV	6	530lm	4000K	90	100-245V AC	60	White Mat	Aluminium	ON-OFF
	FLOODIE-S-F-6-NW-60-WM-LV	6	550lm	4000K	90	24V DC	60	White Mat	Aluminium	DALI
	FLOODIE-S-F-6-VW-15-BM-HV	6	490lm	2700K	90	100-245V AC	15	Black Mat	Aluminium	ON-OFF
	FLOODIE-S-F-6-VW-15-BM-HV-UB	6	490lm	2700K	90	100-245V AC	15	Black Mat	Aluminium	ON-OFF
	FLOODIE-S-F-6-VW-15-BM-HV-US	6	490lm	2700K	90	100-245V AC	15	Black Mat	Aluminium	ON-OFF
	FLOODIE-S-F-6-VW-15-BM-LV	6	515lm	2700K	90	24V DC	15	Black Mat	Aluminium	DALI
	FLOODIE-S-F-6-VW-15-BM-LV-UB	6	515lm	2700K	90	24V DC	15	Black Mat	Aluminium	DALI
	FLOODIE-S-F-6-VW-15-BM-LV-US	6	515lm	2700K	90	24V DC	15	Black Mat	Aluminium	DALI
	FLOODIE-S-F-6-VW-15-BR-HV	6	490lm	2700K	90	100-245V AC	15	Brown Corten	Aluminium	ON-OFF
	FLOODIE-S-F-6-VW-15-BR-LV	6	515lm	2700K	90	24V DC	15	Brown Corten	Aluminium	DALI
	FLOODIE-S-F-6-VW-15-GD-HV	6	490lm	2700K	90	100-245V AC	15	Dark Grey	Aluminium	ON-OFF
	FLOODIE-S-F-6-VW-15-GD-LV	6	515lm	2700K	90	24V DC	15	Dark Grey	Aluminium	DALI
	FLOODIE-S-F-6-VW-15-WM-HV	6	490lm	2700K	90	100-245V AC	15	White Mat	Aluminium	ON-OFF
	FLOODIE-S-F-6-VW-15-WM-LV	6	515lm	2700K	90	24V DC	15	White Mat	Aluminium	DALI
	FLOODIE-S-F-6-VW-24-BM-HV	6	490lm	2700K	90	100-245V AC	24	Black Mat	Aluminium	ON-OFF
	FLOODIE-S-F-6-VW-24-BM-HV-UB	6	490lm	2700K	90	100-245V AC	24	Black Mat	Aluminium	ON-OFF
	FLOODIE-S-F-6-VW-24-BM-HV-US	6	490lm	2700K	90	100-245V AC	24	Black Mat	Aluminium	ON-OFF
	FLOODIE-S-F-6-VW-24-BM-LV	6	515lm	2700K	90	24V DC	24	Black Mat	Aluminium	DALI
	FLOODIE-S-F-6-VW-24-BM-LV-UB	6	515lm	2700K	90	24V DC	24	Black Mat	Aluminium	DALI
	FLOODIE-S-F-6-VW-24-BM-LV-US	6	515lm	2700K	90	24V DC	24	Black Mat	Aluminium	DALI
	FLOODIE-S-F-6-VW-24-BR-HV	6	490lm	2700K	90	100-245V AC	24	Brown Corten	Aluminium	ON-OFF
	FLOODIE-S-F-6-VW-24-BR-LV	6	515lm	2700K	90	24V DC	24	Brown Corten	Aluminium	DALI
	FLOODIE-S-F-6-VW-24-GD-HV	6	490lm	2700K	90	100-245V AC	24	Dark Grey	Aluminium	ON-OFF
	FLOODIE-S-F-6-VW-24-GD-LV	6	515lm	2700K	90	24V DC	24	Dark Grey	Aluminium	DALI

Niviss reserves the right to make technical changes without prior notice
product_card_20261117_053126

	FLOODIE-S-F-6-VW-24-WM-HV	6	490lm	2700K	90	100-245V AC	24	White Mat	Aluminium	ON-OFF
	FLOODIE-S-F-6-VW-24-WM-LV	6	515lm	2700K	90	24V DC	24	White Mat	Aluminium	DALI
	FLOODIE-S-F-6-VW-36-BM-HV	6	490lm	2700K	90	100-245V AC	36	Black Mat	Aluminium	ON-OFF
	FLOODIE-S-F-6-VW-36-BM-HV-UB	6	490lm	2700K	90	100-245V AC	36	Black Mat	Aluminium	ON-OFF
	FLOODIE-S-F-6-VW-36-BM-HV-US	6	490lm	2700K	90	100-245V AC	36	Black Mat	Aluminium	ON-OFF
	FLOODIE-S-F-6-VW-36-BM-LV	6	515lm	2700K	90	24V DC	36	Black Mat	Aluminium	DALI
	FLOODIE-S-F-6-VW-36-BM-LV-UB	6	515lm	2700K	90	24V DC	36	Black Mat	Aluminium	DALI
	FLOODIE-S-F-6-VW-36-BM-LV-US	6	515lm	2700K	90	24V DC	36	Black Mat	Aluminium	DALI
	FLOODIE-S-F-6-VW-36-BR-HV	6	490lm	2700K	90	100-245V AC	36	Brown Corten	Aluminium	ON-OFF
	FLOODIE-S-F-6-VW-36-BR-LV	6	515lm	2700K	90	24V DC	36	Brown Corten	Aluminium	DALI
	FLOODIE-S-F-6-VW-36-GD-HV	6	490lm	2700K	90	100-245V AC	36	Dark Grey	Aluminium	ON-OFF
	FLOODIE-S-F-6-VW-36-GD-LV	6	515lm	2700K	90	24V DC	36	Dark Grey	Aluminium	DALI
	FLOODIE-S-F-6-VW-36-WM-HV	6	490lm	2700K	90	100-245V AC	36	White Mat	Aluminium	ON-OFF
	FLOODIE-S-F-6-VW-36-WM-LV	6	515lm	2700K	90	24V DC	36	White Mat	Aluminium	DALI
	FLOODIE-S-F-6-VW-60-BM-HV	6	490lm	2700K	90	100-245V AC	60	Black Mat	Aluminium	ON-OFF
	FLOODIE-S-F-6-VW-60-BM-HV-UB	6	490lm	2700K	90	100-245V AC	60	Black Mat	Aluminium	ON-OFF
	FLOODIE-S-F-6-VW-60-BM-HV-US	6	490lm	2700K	90	100-245V AC	60	Black Mat	Aluminium	ON-OFF
	FLOODIE-S-F-6-VW-60-BM-LV	6	515lm	2700K	90	24V DC	60	Black Mat	Aluminium	DALI
	FLOODIE-S-F-6-VW-60-BM-LV-UB	6	515lm	2700K	90	24V DC	60	Black Mat	Aluminium	DALI
	FLOODIE-S-F-6-VW-60-BM-LV-US	6	515lm	2700K	90	24V DC	60	Black Mat	Aluminium	DALI
	FLOODIE-S-F-6-VW-60-BR-HV	6	490lm	2700K	90	100-245V AC	60	Brown Corten	Aluminium	ON-OFF
	FLOODIE-S-F-6-VW-60-BR-LV	6	515lm	2700K	90	24V DC	60	Brown Corten	Aluminium	DALI
	FLOODIE-S-F-6-VW-60-GD-HV	6	490lm	2700K	90	100-245V AC	60	Dark Grey	Aluminium	ON-OFF
	FLOODIE-S-F-6-VW-60-GD-LV	6	515lm	2700K	90	24V DC	60	Dark Grey	Aluminium	DALI

Niviss reserves the right to make technical changes without prior notice
product_card_20261117_053126

	FLOODIE-S-F-6-VW-60-WM-HV	6	490lm	2700K	90	100-245V AC	60	White Mat	Aluminium	ON-OFF
	FLOODIE-S-F-6-VW-60-WM-LV	6	515lm	2700K	90	24V DC	60	White Mat	Aluminium	DALI
	FLOODIE-S-F-6-WW-15-BM-HV	6	510lm	3000K	90	100-245V AC	15	Black Mat	Aluminium	ON-OFF
	FLOODIE-S-F-6-WW-15-BM-HV-UB	6	510lm	3000K	90	100-245V AC	15	Black Mat	Aluminium	ON-OFF
	FLOODIE-S-F-6-WW-15-BM-HV-US	6	510lm	3000K	90	100-245V AC	15	Black Mat	Aluminium	ON-OFF
	FLOODIE-S-F-6-WW-15-BM-LV	6	530lm	3000K	90	24V DC	15	Black Mat	Aluminium	DALI
	FLOODIE-S-F-6-WW-15-BM-LV-UB	6	530lm	3000K	90	24V DC	15	Black Mat	Aluminium	DALI
	FLOODIE-S-F-6-WW-15-BM-LV-US	6	530lm	3000K	90	24V DC	15	Black Mat	Aluminium	DALI
	FLOODIE-S-F-6-WW-15-BR-HV	6	510lm	3000K	90	100-245V AC	15	Brown Corten	Aluminium	ON-OFF
	FLOODIE-S-F-6-WW-15-BR-LV	6	530lm	3000K	90	24V DC	15	Brown Corten	Aluminium	DALI
	FLOODIE-S-F-6-WW-15-GD-HV	6	510lm	3000K	90	100-245V AC	15	Dark Grey	Aluminium	ON-OFF
	FLOODIE-S-F-6-WW-15-GD-LV	6	530lm	3000K	90	24V DC	15	Dark Grey	Aluminium	DALI
	FLOODIE-S-F-6-WW-15-WM-HV	6	510lm	3000K	90	100-245V AC	15	White Mat	Aluminium	ON-OFF
	FLOODIE-S-F-6-WW-15-WM-LV	6	530lm	3000K	90	24V DC	15	White Mat	Aluminium	DALI
	FLOODIE-S-F-6-WW-24-BM-HV	6	510lm	3000K	90	100-245V AC	24	Black Mat	Aluminium	ON-OFF
	FLOODIE-S-F-6-WW-24-BM-HV-UB	6	510lm	3000K	90	100-245V AC	24	Black Mat	Aluminium	ON-OFF
	FLOODIE-S-F-6-WW-24-BM-HV-US	6	510lm	3000K	90	100-245V AC	24	Black Mat	Aluminium	ON-OFF
	FLOODIE-S-F-6-WW-24-BM-LV	6	530lm	3000K	90	24V DC	24	Black Mat	Aluminium	DALI
	FLOODIE-S-F-6-WW-24-BM-LV-UB	6	530lm	3000K	90	24V DC	24	Black Mat	Aluminium	DALI
	FLOODIE-S-F-6-WW-24-BM-LV-US	6	530lm	3000K	90	24V DC	24	Black Mat	Aluminium	DALI
	FLOODIE-S-F-6-WW-24-BR-HV	6	510lm	3000K	90	100-245V AC	24	Brown Corten	Aluminium	ON-OFF
	FLOODIE-S-F-6-WW-24-BR-LV	6	530lm	3000K	90	24V DC	24	Brown Corten	Aluminium	DALI
	FLOODIE-S-F-6-WW-24-GD-HV	6	510lm	3000K	90	100-245V AC	24	Dark Grey	Aluminium	ON-OFF
	FLOODIE-S-F-6-WW-24-GD-LV	6	530lm	3000K	90	24V DC	24	Dark Grey	Aluminium	DALI

Niviss reserves the right to make technical changes without prior notice
product_card_20261117_053126

	FLOODIE-S-F-6-WW-24-WM-HV	6	510lm	3000K	90	100-245V AC	24	White Mat	Aluminium	ON-OFF
	FLOODIE-S-F-6-WW-24-WM-LV	6	530lm	3000K	90	24V DC	24	White Mat	Aluminium	DALI
	FLOODIE-S-F-6-WW-36-BM-HV	6	510lm	3000K	90	100-245V AC	36	Black Mat	Aluminium	ON-OFF
	FLOODIE-S-F-6-WW-36-BM-HV-UB	6	510lm	3000K	90	100-245V AC	36	Black Mat	Aluminium	ON-OFF
	FLOODIE-S-F-6-WW-36-BM-HV-US	6	510lm	3000K	90	100-245V AC	36	Black Mat	Aluminium	ON-OFF
	FLOODIE-S-F-6-WW-36-BM-LV	6	530lm	3000K	90	24V DC	36	Black Mat	Aluminium	DALI
	FLOODIE-S-F-6-WW-36-BM-LV-UB	6	530lm	3000K	90	24V DC	36	Black Mat	Aluminium	DALI
	FLOODIE-S-F-6-WW-36-BM-LV-US	6	530lm	3000K	90	24V DC	36	Black Mat	Aluminium	DALI
	FLOODIE-S-F-6-WW-36-BR-HV	6	510lm	3000K	90	100-245V AC	36	Brown Corten	Aluminium	ON-OFF
	FLOODIE-S-F-6-WW-36-BR-LV	6	530lm	3000K	90	24V DC	36	Brown Corten	Aluminium	DALI
	FLOODIE-S-F-6-WW-36-GD-HV	6	510lm	3000K	90	100-245V AC	36	Dark Grey	Aluminium	ON-OFF
	FLOODIE-S-F-6-WW-36-GD-LV	6	530lm	3000K	90	24V DC	36	Dark Grey	Aluminium	DALI
	FLOODIE-S-F-6-WW-36-WM-HV	6	510lm	3000K	90	100-245V AC	36	White Mat	Aluminium	ON-OFF
	FLOODIE-S-F-6-WW-36-WM-LV	6	530lm	3000K	90	24V DC	36	White Mat	Aluminium	DALI
	FLOODIE-S-F-6-WW-60-BM-HV	6	510lm	3000K	90	100-245V AC	60	Black Mat	Aluminium	ON-OFF
	FLOODIE-S-F-6-WW-60-BM-HV-UB	6	510lm	3000K	90	100-245V AC	60	Black Mat	Aluminium	ON-OFF
	FLOODIE-S-F-6-WW-60-BM-HV-US	6	510lm	3000K	90	100-245V AC	60	Black Mat	Aluminium	ON-OFF
	FLOODIE-S-F-6-WW-60-BM-LV	6	530lm	3000K	90	24V DC	60	Black Mat	Aluminium	DALI
	FLOODIE-S-F-6-WW-60-BM-LV-UB	6	530lm	3000K	90	24V DC	60	Black Mat	Aluminium	DALI
	FLOODIE-S-F-6-WW-60-BM-LV-US	6	530lm	3000K	90	24V DC	60	Black Mat	Aluminium	DALI
	FLOODIE-S-F-6-WW-60-BR-HV	6	510lm	3000K	90	100-245V AC	60	Brown Corten	Aluminium	ON-OFF
	FLOODIE-S-F-6-WW-60-BR-LV	6	530lm	3000K	90	24V DC	60	Brown Corten	Aluminium	DALI
	FLOODIE-S-F-6-WW-60-GD-HV	6	510lm	3000K	90	100-245V AC	60	Dark Grey	Aluminium	ON-OFF
	FLOODIE-S-F-6-WW-60-GD-LV	6	530lm	3000K	90	24V DC	60	Dark Grey	Aluminium	DALI

Niviss reserves the right to make technical changes without prior notice
product_card_20261117_053126

	FLOODIE-S-F-6-WW-60-WM-HV	6	510lm	3000K	90	100-245V AC	60	White Mat	Aluminium	ON-OFF
	FLOODIE-S-F-6-WW-60-WM-LV	6	530lm	3000K	90	24V DC	60	White Mat	Aluminium	DALI
	FLOODIE-S-S-6-CW-15-BM-HV	6	545lm	6000K	90	100-245V AC	15	Black Mat	Aluminium	ON-OFF
	FLOODIE-S-S-6-CW-15-BM-HV-UB	6	545lm	6000K	90	100-245V AC	15	Black Mat	Aluminium	ON-OFF
	FLOODIE-S-S-6-CW-15-BM-HV-US	6	545lm	6000K	90	100-245V AC	15	Black Mat	Aluminium	ON-OFF
	FLOODIE-S-S-6-CW-15-BM-LV	6	570lm	6000K	90	24V DC	15	Black Mat	Aluminium	DALI
	FLOODIE-S-S-6-CW-15-BM-LV-UB	6	570lm	6000K	90	24V DC	15	Black Mat	Aluminium	DALI
	FLOODIE-S-S-6-CW-15-BM-LV-US	6	570lm	6000K	90	24V DC	15	Black Mat	Aluminium	DALI
	FLOODIE-S-S-6-CW-15-BR-HV	6	545lm	6000K	90	100-245V AC	15	Brown Corten	Aluminium	ON-OFF
	FLOODIE-S-S-6-CW-15-BR-LV	6	570lm	6000K	90	24V DC	15	Brown Corten	Aluminium	DALI
	FLOODIE-S-S-6-CW-15-GD-HV	6	545lm	6000K	90	100-245V AC	15	Dark Grey	Aluminium	ON-OFF
	FLOODIE-S-S-6-CW-15-GD-LV	6	570lm	6000K	90	24V DC	15	Dark Grey	Aluminium	DALI
	FLOODIE-S-S-6-CW-15-WM-HV	6	545lm	6000K	90	100-245V AC	15	White Mat	Aluminium	ON-OFF
	FLOODIE-S-S-6-CW-15-WM-LV	6	570lm	6000K	90	24V DC	15	White Mat	Aluminium	DALI
	FLOODIE-S-S-6-CW-24-BM-HV	6	545lm	6000K	90	100-245V AC	24	Black Mat	Aluminium	ON-OFF
	FLOODIE-S-S-6-CW-24-BM-HV-UB	6	545lm	6000K	90	100-245V AC	24	Black Mat	Aluminium	ON-OFF
	FLOODIE-S-S-6-CW-24-BM-HV-US	6	545lm	6000K	90	100-245V AC	24	Black Mat	Aluminium	ON-OFF
	FLOODIE-S-S-6-CW-24-BM-LV	6	570lm	6000K	90	24V DC	24	Black Mat	Aluminium	DALI
	FLOODIE-S-S-6-CW-24-BM-LV-UB	6	570lm	6000K	90	24V DC	24	Black Mat	Aluminium	DALI
	FLOODIE-S-S-6-CW-24-BM-LV-US	6	570lm	6000K	90	24V DC	24	Black Mat	Aluminium	DALI
	FLOODIE-S-S-6-CW-24-BR-HV	6	545lm	6000K	90	100-245V AC	24	Brown Corten	Aluminium	ON-OFF
	FLOODIE-S-S-6-CW-24-BR-LV	6	570lm	6000K	90	24V DC	24	Brown Corten	Aluminium	DALI
	FLOODIE-S-S-6-CW-24-GD-HV	6	545lm	6000K	90	100-245V AC	24	Dark Grey	Aluminium	ON-OFF
	FLOODIE-S-S-6-CW-24-GD-LV	6	570lm	6000K	90	24V DC	24	Dark Grey	Aluminium	DALI

Niviss reserves the right to make technical changes without prior notice
product_card_20261117_053126

	FLOODIE-S-S-6-CW-24-WM-HV	6	545lm	6000K	90	100-245V AC	24	White Mat	Aluminium	ON-OFF
	FLOODIE-S-S-6-CW-24-WM-LV	6	570lm	6000K	90	24V DC	24	White Mat	Aluminium	DALI
	FLOODIE-S-S-6-CW-36-BM-HV	6	545lm	6000K	90	100-245V AC	36	Black Mat	Aluminium	ON-OFF
	FLOODIE-S-S-6-CW-36-BM-HV-UB	6	545lm	6000K	90	100-245V AC	36	Black Mat	Aluminium	ON-OFF
	FLOODIE-S-S-6-CW-36-BM-HV-US	6	545lm	6000K	90	100-245V AC	36	Black Mat	Aluminium	ON-OFF
	FLOODIE-S-S-6-CW-36-BM-LV	6	570lm	6000K	90	24V DC	36	Black Mat	Aluminium	DALI
	FLOODIE-S-S-6-CW-36-BM-LV-UB	6	570lm	6000K	90	24V DC	36	Black Mat	Aluminium	DALI
	FLOODIE-S-S-6-CW-36-BM-LV-US	6	570lm	6000K	90	24V DC	36	Black Mat	Aluminium	DALI
	FLOODIE-S-S-6-CW-36-BR-HV	6	545lm	6000K	90	100-245V AC	36	Brown Corten	Aluminium	ON-OFF
	FLOODIE-S-S-6-CW-36-BR-LV	6	570lm	6000K	90	24V DC	36	Brown Corten	Aluminium	DALI
	FLOODIE-S-S-6-CW-36-GD-HV	6	545lm	6000K	90	100-245V AC	36	Dark Grey	Aluminium	ON-OFF
	FLOODIE-S-S-6-CW-36-GD-LV	6	570lm	6000K	90	24V DC	36	Dark Grey	Aluminium	DALI
	FLOODIE-S-S-6-CW-36-WM-HV	6	545lm	6000K	90	100-245V AC	36	White Mat	Aluminium	ON-OFF
	FLOODIE-S-S-6-CW-36-WM-LV	6	570lm	6000K	90	24V DC	36	White Mat	Aluminium	DALI
	FLOODIE-S-S-6-CW-60-BM-HV	6	545lm	6000K	90	100-245V AC	60	Black Mat	Aluminium	ON-OFF
	FLOODIE-S-S-6-CW-60-BM-HV-UB	6	545lm	6000K	90	100-245V AC	60	Black Mat	Aluminium	ON-OFF
	FLOODIE-S-S-6-CW-60-BM-HV-US	6	545lm	6000K	90	100-245V AC	60	Black Mat	Aluminium	ON-OFF
	FLOODIE-S-S-6-CW-60-BM-LV	6	570lm	6000K	90	24V DC	60	Black Mat	Aluminium	DALI
	FLOODIE-S-S-6-CW-60-BM-LV-UB	6	570lm	6000K	90	24V DC	60	Black Mat	Aluminium	DALI
	FLOODIE-S-S-6-CW-60-BM-LV-US	6	570lm	6000K	90	24V DC	60	Black Mat	Aluminium	DALI
	FLOODIE-S-S-6-CW-60-BR-HV	6	545lm	6000K	90	100-245V AC	60	Brown Corten	Aluminium	ON-OFF
	FLOODIE-S-S-6-CW-60-BR-LV	6	570lm	6000K	90	24V DC	60	Brown Corten	Aluminium	DALI
	FLOODIE-S-S-6-CW-60-GD-HV	6	545lm	6000K	90	100-245V AC	60	Dark Grey	Aluminium	ON-OFF
	FLOODIE-S-S-6-CW-60-GD-LV	6	570lm	6000K	90	24V DC	60	Dark Grey	Aluminium	DALI

Niviss reserves the right to make technical changes without prior notice
product_card_20261117_053126

	FLOODIE-S-S-6-CW-60-WM-HV	6	545lm	6000K	90	100-245V AC	60	White Mat	Aluminium	ON-OFF
	FLOODIE-S-S-6-CW-60-WM-LV	6	570lm	6000K	90	24V DC	60	White Mat	Aluminium	DALI
	FLOODIE-S-S-6-NW-15-BM-HV	6	530lm	4000K	90	100-245V AC	15	Black Mat	Aluminium	ON-OFF
	FLOODIE-S-S-6-NW-15-BM-HV-UB	6	530lm	4000K	90	100-245V AC	15	Black Mat	Aluminium	ON-OFF
	FLOODIE-S-S-6-NW-15-BM-HV-US	6	530lm	4000K	90	100-245V AC	15	Black Mat	Aluminium	ON-OFF
	FLOODIE-S-S-6-NW-15-BM-LV	6	550lm	4000K	90	24V DC	15	Black Mat	Aluminium	DALI
	FLOODIE-S-S-6-NW-15-BM-LV-UB	6	550lm	4000K	90	24V DC	15	Black Mat	Aluminium	DALI
	FLOODIE-S-S-6-NW-15-BM-LV-US	6	550lm	4000K	90	24V DC	15	Black Mat	Aluminium	DALI
	FLOODIE-S-S-6-NW-15-BR-HV	6	530lm	4000K	90	100-245V AC	15	Brown Corten	Aluminium	ON-OFF
	FLOODIE-S-S-6-NW-15-BR-LV	6	550lm	4000K	90	24V DC	15	Brown Corten	Aluminium	DALI
	FLOODIE-S-S-6-NW-15-GD-HV	6	530lm	4000K	90	100-245V AC	15	Dark Grey	Aluminium	ON-OFF
	FLOODIE-S-S-6-NW-15-GD-LV	6	550lm	4000K	90	24V DC	15	Dark Grey	Aluminium	DALI
	FLOODIE-S-S-6-NW-15-WM-HV	6	530lm	4000K	90	100-245V AC	15	White Mat	Aluminium	ON-OFF
	FLOODIE-S-S-6-NW-15-WM-LV	6	550lm	4000K	90	24V DC	15	White Mat	Aluminium	DALI
	FLOODIE-S-S-6-NW-24-BM-HV	6	530lm	4000K	90	100-245V AC	24	Black Mat	Aluminium	ON-OFF
	FLOODIE-S-S-6-NW-24-BM-HV-UB	6	530lm	4000K	90	100-245V AC	24	Black Mat	Aluminium	ON-OFF
	FLOODIE-S-S-6-NW-24-BM-HV-US	6	530lm	4000K	90	100-245V AC	24	Black Mat	Aluminium	ON-OFF
	FLOODIE-S-S-6-NW-24-BM-LV	6	550lm	4000K	90	24V DC	24	Black Mat	Aluminium	DALI
	FLOODIE-S-S-6-NW-24-BM-LV-UB	6	550lm	4000K	90	24V DC	24	Black Mat	Aluminium	DALI
	FLOODIE-S-S-6-NW-24-BM-LV-US	6	550lm	4000K	90	24V DC	24	Black Mat	Aluminium	DALI
	FLOODIE-S-S-6-NW-24-BR-HV	6	530lm	4000K	90	100-245V AC	24	Brown Corten	Aluminium	ON-OFF
	FLOODIE-S-S-6-NW-24-BR-LV	6	550lm	4000K	90	24V DC	24	Brown Corten	Aluminium	DALI
	FLOODIE-S-S-6-NW-24-GD-HV	6	530lm	4000K	90	100-245V AC	24	Dark Grey	Aluminium	ON-OFF
	FLOODIE-S-S-6-NW-24-GD-LV	6	550lm	4000K	90	24V DC	24	Dark Grey	Aluminium	DALI

Niviss reserves the right to make technical changes without prior notice
product_card_20261117_053126

	FLOODIE-S-S-6-NW-24-WM-HV	6	530lm	4000K	90	100-245V AC	24	White Mat	Aluminium	ON-OFF
	FLOODIE-S-S-6-NW-24-WM-LV	6	550lm	4000K	90	24V DC	24	White Mat	Aluminium	DALI
	FLOODIE-S-S-6-NW-36-BM-HV	6	530lm	4000K	90	100-245V AC	36	Black Mat	Aluminium	ON-OFF
	FLOODIE-S-S-6-NW-36-BM-HV-UB	6	530lm	4000K	90	100-245V AC	36	Black Mat	Aluminium	ON-OFF
	FLOODIE-S-S-6-NW-36-BM-HV-US	6	530lm	4000K	90	100-245V AC	36	Black Mat	Aluminium	ON-OFF
	FLOODIE-S-S-6-NW-36-BM-LV	6	550lm	4000K	90	24V DC	36	Black Mat	Aluminium	DALI
	FLOODIE-S-S-6-NW-36-BM-LV-UB	6	550lm	4000K	90	24V DC	36	Black Mat	Aluminium	DALI
	FLOODIE-S-S-6-NW-36-BM-LV-US	6	550lm	4000K	90	24V DC	36	Black Mat	Aluminium	DALI
	FLOODIE-S-S-6-NW-36-BR-HV	6	530lm	4000K	90	100-245V AC	36	Brown Corten	Aluminium	ON-OFF
	FLOODIE-S-S-6-NW-36-BR-LV	6	550lm	4000K	90	24V DC	36	Brown Corten	Aluminium	DALI
	FLOODIE-S-S-6-NW-36-GD-HV	6	530lm	4000K	90	100-245V AC	36	Dark Grey	Aluminium	ON-OFF
	FLOODIE-S-S-6-NW-36-GD-LV	6	550lm	4000K	90	24V DC	36	Dark Grey	Aluminium	DALI
	FLOODIE-S-S-6-NW-36-WM-HV	6	530lm	4000K	90	100-245V AC	36	White Mat	Aluminium	ON-OFF
	FLOODIE-S-S-6-NW-36-WM-LV	6	550lm	4000K	90	24V DC	36	White Mat	Aluminium	DALI
	FLOODIE-S-S-6-NW-60-BM-HV	6	530lm	4000K	90	100-245V AC	60	Black Mat	Aluminium	ON-OFF
	FLOODIE-S-S-6-NW-60-BM-HV-UB	6	530lm	4000K	90	100-245V AC	60	Black Mat	Aluminium	ON-OFF
	FLOODIE-S-S-6-NW-60-BM-HV-US	6	530lm	4000K	90	100-245V AC	60	Black Mat	Aluminium	ON-OFF
	FLOODIE-S-S-6-NW-60-BM-LV	6	550lm	4000K	90	24V DC	60	Black Mat	Aluminium	DALI
	FLOODIE-S-S-6-NW-60-BM-LV-UB	6	550lm	4000K	90	24V DC	60	Black Mat	Aluminium	DALI
	FLOODIE-S-S-6-NW-60-BM-LV-US	6	550lm	4000K	90	24V DC	60	Black Mat	Aluminium	DALI
	FLOODIE-S-S-6-NW-60-BR-HV	6	530lm	4000K	90	100-245V AC	60	Brown Corten	Aluminium	ON-OFF
	FLOODIE-S-S-6-NW-60-BR-LV	6	550lm	4000K	90	24V DC	60	Brown Corten	Aluminium	DALI
	FLOODIE-S-S-6-NW-60-GD-HV	6	530lm	4000K	90	100-245V AC	60	Dark Grey	Aluminium	ON-OFF
	FLOODIE-S-S-6-NW-60-GD-LV	6	550lm	4000K	90	24V DC	60	Dark Grey	Aluminium	DALI

	FLOODIE-S-S-6-NW-60-WM-HV	6	530lm	4000K	90	100-245V AC	60	White Mat	Aluminium	ON-OFF
	FLOODIE-S-S-6-NW-60-WM-LV	6	550lm	4000K	90	24V DC	60	White Mat	Aluminium	DALI
	FLOODIE-S-S-6-VW-15-BM-HV	6	490lm	2700K	90	100-245V AC	15	Black Mat	Aluminium	ON-OFF
	FLOODIE-S-S-6-VW-15-BM-HV-UB	6	490lm	2700K	90	100-245V AC	15	Black Mat	Aluminium	ON-OFF
	FLOODIE-S-S-6-VW-15-BM-HV-US	6	490lm	2700K	90	100-245V AC	15	Black Mat	Aluminium	ON-OFF
	FLOODIE-S-S-6-VW-15-BM-LV	6	515lm	2700K	90	24V DC	15	Black Mat	Aluminium	DALI
	FLOODIE-S-S-6-VW-15-BM-LV-UB	6	515lm	2700K	90	24V DC	15	Black Mat	Aluminium	DALI
	FLOODIE-S-S-6-VW-15-BM-LV-US	6	515lm	2700K	90	24V DC	15	Black Mat	Aluminium	DALI
	FLOODIE-S-S-6-VW-15-BR-HV	6	490lm	2700K	90	100-245V AC	15	Brown Corten	Aluminium	ON-OFF
	FLOODIE-S-S-6-VW-15-BR-LV	6	515lm	2700K	90	24V DC	15	Brown Corten	Aluminium	DALI
	FLOODIE-S-S-6-VW-15-GD-HV	6	490lm	2700K	90	100-245V AC	15	Dark Grey	Aluminium	ON-OFF
	FLOODIE-S-S-6-VW-15-GD-LV	6	515lm	2700K	90	24V DC	15	Dark Grey	Aluminium	DALI
	FLOODIE-S-S-6-VW-15-WM-HV	6	490lm	2700K	90	100-245V AC	15	White Mat	Aluminium	ON-OFF
	FLOODIE-S-S-6-VW-15-WM-LV	6	515lm	2700K	90	24V DC	15	White Mat	Aluminium	DALI
	FLOODIE-S-S-6-VW-24-BM-HV	6	490lm	2700K	90	100-245V AC	24	Black Mat	Aluminium	ON-OFF
	FLOODIE-S-S-6-VW-24-BM-HV-UB	6	490lm	2700K	90	100-245V AC	24	Black Mat	Aluminium	ON-OFF
	FLOODIE-S-S-6-VW-24-BM-HV-US	6	490lm	2700K	90	100-245V AC	24	Black Mat	Aluminium	ON-OFF
	FLOODIE-S-S-6-VW-24-BM-LV	6	515lm	2700K	90	24V DC	24	Black Mat	Aluminium	DALI
	FLOODIE-S-S-6-VW-24-BM-LV-UB	6	515lm	2700K	90	24V DC	24	Black Mat	Aluminium	DALI
	FLOODIE-S-S-6-VW-24-BM-LV-US	6	515lm	2700K	90	24V DC	24	Black Mat	Aluminium	DALI
	FLOODIE-S-S-6-VW-24-BR-HV	6	490lm	2700K	90	100-245V AC	24	Brown Corten	Aluminium	ON-OFF
	FLOODIE-S-S-6-VW-24-BR-LV	6	515lm	2700K	90	24V DC	24	Brown Corten	Aluminium	DALI
	FLOODIE-S-S-6-VW-24-GD-HV	6	490lm	2700K	90	100-245V AC	24	Dark Grey	Aluminium	ON-OFF
	FLOODIE-S-S-6-VW-24-GD-LV	6	515lm	2700K	90	24V DC	24	Dark Grey	Aluminium	DALI

Niviss reserves the right to make technical changes without prior notice
product_card_20261117_053126

	FLOODIE-S-S-6-VW-24-WM-HV	6	490lm	2700K	90	100-245V AC	24	White Mat	Aluminium	ON-OFF
	FLOODIE-S-S-6-VW-24-WM-LV	6	515lm	2700K	90	24V DC	24	White Mat	Aluminium	DALI
	FLOODIE-S-S-6-VW-36-BM-HV	6	490lm	2700K	90	100-245V AC	36	Black Mat	Aluminium	ON-OFF
	FLOODIE-S-S-6-VW-36-BM-HV-UB	6	490lm	2700K	90	100-245V AC	36	Black Mat	Aluminium	ON-OFF
	FLOODIE-S-S-6-VW-36-BM-HV-US	6	490lm	2700K	90	100-245V AC	36	Black Mat	Aluminium	ON-OFF
	FLOODIE-S-S-6-VW-36-BM-LV	6	515lm	2700K	90	24V DC	36	Black Mat	Aluminium	DALI
	FLOODIE-S-S-6-VW-36-BM-LV-UB	6	515lm	2700K	90	24V DC	36	Black Mat	Aluminium	DALI
	FLOODIE-S-S-6-VW-36-BM-LV-US	6	515lm	2700K	90	24V DC	36	Black Mat	Aluminium	DALI
	FLOODIE-S-S-6-VW-36-BR-HV	6	490lm	2700K	90	100-245V AC	36	Brown Corten	Aluminium	ON-OFF
	FLOODIE-S-S-6-VW-36-BR-LV	6	515lm	2700K	90	24V DC	36	Brown Corten	Aluminium	DALI
	FLOODIE-S-S-6-VW-36-GD-HV	6	490lm	2700K	90	100-245V AC	36	Dark Grey	Aluminium	ON-OFF
	FLOODIE-S-S-6-VW-36-GD-LV	6	515lm	2700K	90	24V DC	36	Dark Grey	Aluminium	DALI
	FLOODIE-S-S-6-VW-36-WM-HV	6	490lm	2700K	90	100-245V AC	36	White Mat	Aluminium	ON-OFF
	FLOODIE-S-S-6-VW-36-WM-LV	6	515lm	2700K	90	24V DC	36	White Mat	Aluminium	DALI
	FLOODIE-S-S-6-VW-60-BM-HV	6	490lm	2700K	90	100-245V AC	60	Black Mat	Aluminium	ON-OFF
	FLOODIE-S-S-6-VW-60-BM-HV-UB	6	490lm	2700K	90	100-245V AC	60	Black Mat	Aluminium	ON-OFF
	FLOODIE-S-S-6-VW-60-BM-HV-US	6	490lm	2700K	90	100-245V AC	60	Black Mat	Aluminium	ON-OFF
	FLOODIE-S-S-6-VW-60-BM-LV	6	515lm	2700K	90	24V DC	60	Black Mat	Aluminium	DALI
	FLOODIE-S-S-6-VW-60-BM-LV-UB	6	515lm	2700K	90	24V DC	60	Black Mat	Aluminium	DALI
	FLOODIE-S-S-6-VW-60-BM-LV-US	6	515lm	2700K	90	24V DC	60	Black Mat	Aluminium	DALI
	FLOODIE-S-S-6-VW-60-BR-HV	6	490lm	2700K	90	100-245V AC	60	Brown Corten	Aluminium	ON-OFF
	FLOODIE-S-S-6-VW-60-BR-LV	6	515lm	2700K	90	24V DC	60	Brown Corten	Aluminium	DALI
	FLOODIE-S-S-6-VW-60-GD-HV	6	490lm	2700K	90	100-245V AC	60	Dark Grey	Aluminium	ON-OFF
	FLOODIE-S-S-6-VW-60-GD-LV	6	515lm	2700K	90	24V DC	60	Dark Grey	Aluminium	DALI

Niviss reserves the right to make technical changes without prior notice
product_card_20261117_053126

	FLOODIE-S-S-6-VW-60-WM-HV	6	490lm	2700K	90	100-245V AC	60	White Mat	Aluminium	ON-OFF
	FLOODIE-S-S-6-VW-60-WM-LV	6	515lm	2700K	90	24V DC	60	White Mat	Aluminium	DALI
	FLOODIE-S-S-6-WW-15-BM-HV	6	510lm	3000K	90	100-245V AC	15	Black Mat	Aluminium	ON-OFF
	FLOODIE-S-S-6-WW-15-BM-HV-UB	6	510lm	3000K	90	100-245V AC	15	Black Mat	Aluminium	ON-OFF
	FLOODIE-S-S-6-WW-15-BM-HV-US	6	510lm	3000K	90	100-245V AC	15	Black Mat	Aluminium	ON-OFF
	FLOODIE-S-S-6-WW-15-BM-LV	6	530lm	3000K	90	24V DC	15	Black Mat	Aluminium	DALI
	FLOODIE-S-S-6-WW-15-BM-LV-UB	6	530lm	3000K	90	24V DC	15	Black Mat	Aluminium	DALI
	FLOODIE-S-S-6-WW-15-BM-LV-US	6	530lm	3000K	90	24V DC	15	Black Mat	Aluminium	DALI
	FLOODIE-S-S-6-WW-15-BR-HV	6	510lm	3000K	90	100-245V AC	15	Brown Corten	Aluminium	ON-OFF
	FLOODIE-S-S-6-WW-15-BR-LV	6	530lm	3000K	90	24V DC	15	Brown Corten	Aluminium	DALI
	FLOODIE-S-S-6-WW-15-GD-HV	6	510lm	3000K	90	100-245V AC	15	Dark Grey	Aluminium	ON-OFF
	FLOODIE-S-S-6-WW-15-GD-LV	6	530lm	3000K	90	24V DC	15	Dark Grey	Aluminium	DALI
	FLOODIE-S-S-6-WW-15-WM-HV	6	510lm	3000K	90	100-245V AC	15	White Mat	Aluminium	ON-OFF
	FLOODIE-S-S-6-WW-15-WM-LV	6	530lm	3000K	90	24V DC	15	White Mat	Aluminium	DALI
	FLOODIE-S-S-6-WW-24-BM-HV	6	510lm	3000K	90	100-245V AC	24	Black Mat	Aluminium	ON-OFF
	FLOODIE-S-S-6-WW-24-BM-HV-UB	6	510lm	3000K	90	100-245V AC	24	Black Mat	Aluminium	ON-OFF
	FLOODIE-S-S-6-WW-24-BM-HV-US	6	510lm	3000K	90	100-245V AC	24	Black Mat	Aluminium	ON-OFF
	FLOODIE-S-S-6-WW-24-BM-LV	6	530lm	3000K	90	24V DC	24	Black Mat	Aluminium	DALI
	FLOODIE-S-S-6-WW-24-BM-LV-UB	6	530lm	3000K	90	24V DC	24	Black Mat	Aluminium	DALI
	FLOODIE-S-S-6-WW-24-BM-LV-US	6	530lm	3000K	90	24V DC	24	Black Mat	Aluminium	DALI
	FLOODIE-S-S-6-WW-24-BR-HV	6	510lm	3000K	90	100-245V AC	24	Brown Corten	Aluminium	ON-OFF
	FLOODIE-S-S-6-WW-24-BR-LV	6	530lm	3000K	90	24V DC	24	Brown Corten	Aluminium	DALI
	FLOODIE-S-S-6-WW-24-GD-HV	6	510lm	3000K	90	100-245V AC	24	Dark Grey	Aluminium	ON-OFF
	FLOODIE-S-S-6-WW-24-GD-LV	6	530lm	3000K	90	24V DC	24	Dark Grey	Aluminium	DALI

Niviss reserves the right to make technical changes without prior notice
product_card_20261117_053126

	FLOODIE-S-S-6-WW-24-WM-HV	6	510lm	3000K	90	100-245V AC	24	White Mat	Aluminium	ON-OFF
	FLOODIE-S-S-6-WW-24-WM-LV	6	530lm	3000K	90	24V DC	24	White Mat	Aluminium	DALI
	FLOODIE-S-S-6-WW-36-BM-HV	6	510lm	3000K	90	100-245V AC	36	Black Mat	Aluminium	ON-OFF
	FLOODIE-S-S-6-WW-36-BM-HV-UB	6	510lm	3000K	90	100-245V AC	36	Black Mat	Aluminium	ON-OFF
	FLOODIE-S-S-6-WW-36-BM-HV-US	6	510lm	3000K	90	100-245V AC	36	Black Mat	Aluminium	ON-OFF
	FLOODIE-S-S-6-WW-36-BM-LV	6	530lm	3000K	90	24V DC	36	Black Mat	Aluminium	DALI
	FLOODIE-S-S-6-WW-36-BM-LV-UB	6	530lm	3000K	90	24V DC	36	Black Mat	Aluminium	DALI
	FLOODIE-S-S-6-WW-36-BM-LV-US	6	530lm	3000K	90	24V DC	36	Black Mat	Aluminium	DALI
	FLOODIE-S-S-6-WW-36-BR-HV	6	510lm	3000K	90	100-245V AC	36	Brown Corten	Aluminium	ON-OFF
	FLOODIE-S-S-6-WW-36-BR-LV	6	530lm	3000K	90	24V DC	36	Brown Corten	Aluminium	DALI
	FLOODIE-S-S-6-WW-36-GD-HV	6	510lm	3000K	90	100-245V AC	36	Dark Grey	Aluminium	ON-OFF
	FLOODIE-S-S-6-WW-36-GD-LV	6	530lm	3000K	90	24V DC	36	Dark Grey	Aluminium	DALI
	FLOODIE-S-S-6-WW-36-WM-HV	6	510lm	3000K	90	100-245V AC	36	White Mat	Aluminium	ON-OFF
	FLOODIE-S-S-6-WW-36-WM-LV	6	530lm	3000K	90	24V DC	36	White Mat	Aluminium	DALI
	FLOODIE-S-S-6-WW-60-BM-HV	6	510lm	3000K	90	100-245V AC	60	Black Mat	Aluminium	ON-OFF
	FLOODIE-S-S-6-WW-60-BM-HV-UB	6	510lm	3000K	90	100-245V AC	60	Black Mat	Aluminium	ON-OFF
	FLOODIE-S-S-6-WW-60-BM-HV-US	6	510lm	3000K	90	100-245V AC	60	Black Mat	Aluminium	ON-OFF
	FLOODIE-S-S-6-WW-60-BM-LV	6	530lm	3000K	90	24V DC	60	Black Mat	Aluminium	DALI
	FLOODIE-S-S-6-WW-60-BM-LV-UB	6	530lm	3000K	90	24V DC	60	Black Mat	Aluminium	DALI
	FLOODIE-S-S-6-WW-60-BM-LV-US	6	530lm	3000K	90	24V DC	60	Black Mat	Aluminium	DALI
	FLOODIE-S-S-6-WW-60-BR-HV	6	510lm	3000K	90	100-245V AC	60	Brown Corten	Aluminium	ON-OFF
	FLOODIE-S-S-6-WW-60-BR-LV	6	530lm	3000K	90	24V DC	60	Brown Corten	Aluminium	DALI
	FLOODIE-S-S-6-WW-60-GD-HV	6	510lm	3000K	90	100-245V AC	60	Dark Grey	Aluminium	ON-OFF
	FLOODIE-S-S-6-WW-60-GD-LV	6	530lm	3000K	90	24V DC	60	Dark Grey	Aluminium	DALI

Niviss reserves the right to make technical changes without prior notice
product_card_20261117_053126

	FLOODIE-S-S-6-WW-60-WM-HV	6	510lm	3000K	90	100-245V AC	60	White Mat	Aluminium	ON-OFF
	FLOODIE-S-S-6-WW-60-WM-LV	6	530lm	3000K	90	24V DC	60	White Mat	Aluminium	DALI

OGÓLNE WARUNKI UŻYTKOWANIA

- Przed użyciem oprawy świetlnej należy upewnić się na jaki zakres napięć jest ona przeznaczona.
- Podłączenie do zasilania należy wykonać przy wyłączonym zasilaniu.
- Korzystać z odpowiednich gniazdek i wtyczek. Należy upewnić się, że gniazdka i wtyczki elektryczne są zgodne z napięciem i typem oprawy świetlnej.
- Stosować odpowiednie okablowanie do opraw świetlnych.
- Unikać przeciążenia obwodów elektrycznych, nie podłączając zbyt wielu opraw świetlnych do jednego gniazdka lub obwodu. Przed użyciem należy sprawdzić stan przewodu zasilającego i wtyczki pod kątem uszkodzeń lub zużycia.
- Podczas podłączenia oprawy świetlnej należy zwrócić uwagę na prawidłową polaryzację. Niewłaściwa polaryzacja może uniemożliwić prawidłowe działanie opraw świetlnych lub spowodować ich uszkodzenie.
- Montażu opraw świetlnych powinna dokonać osoba wykwalifikowana.
- Należy utrzymywać oprawy świetlne w czystości. Zanieczyszczenia i kurz mogą mieć negatywny wpływ na ich działanie.
- Postępować zgodnie z powyższym schematem podłączenia oprawy.
- Unikać bezpośredniej ekspozycji oczu na jasne źródło światła. Należy ustawić oprawy świetlne w sposób, który minimalizuje bezpośrednie naświetlenie oczu i/lub niekomfortowy poziom jasności.
- Upewnić się, że oprawa jest ustawiona na stabilnej powierzchni i trzymana z dala od materiałów łatwopalnych. Należy pozostawić wystarczającą ilość miejsca wokół oprawy, aby zapobiec przegrzaniu.
- Przechowywać z dala od ognia.

UWAGA DOTYCZĄCA ŚRODOWISKA!

Zabrania się wyrzucania przestarzałego i zużytego sprzętu elektrycznego i elektronicznego razem ze zwykłymi odpadami domowymi. Należy je odpowiednio posegregować i poddać recyklingowi. Stary sprzęt elektroniczny i elektryczny należy zwrócić do punktu zbiórki odpadów wyznaczonego przez firmę zajmującą się gospodarką odpadami. Zużyty sprzęt elektryczny i elektroniczny zostanie rozdzielony na materiały bazowe, które następnie zostaną poddane recyklingowi. Aby uzyskać więcej informacji na temat gospodarki odpadami, skontaktuj się z lokalnymi władzami, służbami zajmującymi się gospodarką odpadami lub sprzedawcą sprzętu elektronicznego i elektrycznego.