Wallie — kompaktowa oprawa ścienna o minimalistycznej formie, stworzona do subtelnego podkreślania elewacji i detali architektonicznych światłem pośrednim.



Obudowa	Aluminium
Rodzaj szkła	Hartowane
Źródło światła	LED Module (replaceable)
Strumień świetlny [lm]	750 - 1700 lm
Tolerancja strumienia świetlnego	10%
Tolerancja barwowa SDCM	<3
Rozsył światła / Emisja	symetryczny / bezpośredni
Kąt rozsyłu	15, 23, 38, 45, 60
Klasa szczelności IP	IP65
Odporność na uderzenia	IK07
Zakres temperatury pracy	-20°C ÷ +55°C
Żywotność L80B10	60 000h
Klasa ochronności	I
Okablowanie	PC Rubber Cable 3x0.5mm²
Podłączenie	0,2m
Ściemnianie	ON-OFF
Zasilacze	wbudowany
Wymiary	Dia: 65mm x H: 170mm , 85mm x W: 98mm
Rodzaj zasilania	220-240V AC 50/60Hz
CRI	>90 / >80
Moc znamionowa [W]	9W, 18W

Dostępne wersje



Niviss reserves the right to make technical changes without prior notice
product_card_20261114_002049

Wymiary

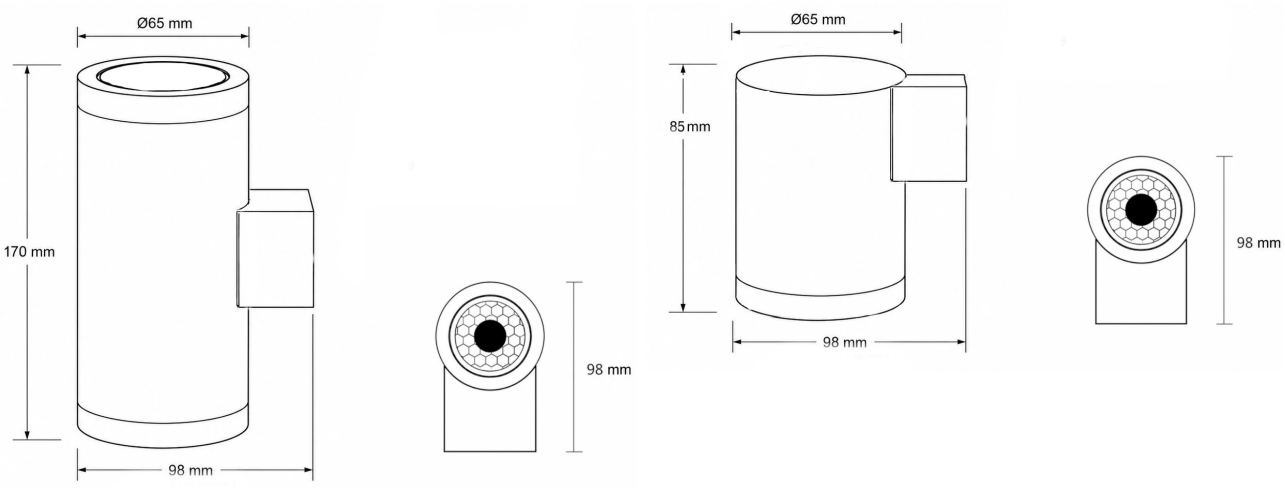

Lista wariantów

Zdjęcie	Indeks	[W]	[LM]	[K]	CRI/Ra>	Rodzaj zasilania	Kąt	Malowanie	Obudowa	Ściemnianie
	WALLIE-18-NW-1515-RD-AM-HV	18	1700lm	4000K	80	220-240V AC	1515	Anthracite Mat	Aluminium	ON-OFF
	WALLIE-18-NW-1515-RD-BM-HV	18	1700lm	4000K	80	220-240V AC	1515	Black Mat	Aluminium	ON-OFF
	WALLIE-18-NW-1515-RD-BR-HV	18	1700lm	4000K	80	220-240V AC	1515	Brown	Aluminium	ON-OFF
	WALLIE-18-NW-1515-RD-WM-HV	18	1700lm	4000K	80	220-240V AC	1515	White Mat	Aluminium	ON-OFF
	WALLIE-18-NW-1523-RD-AM-HV	18	1700lm	4000K	80	220-240V AC	1523	Anthracite Mat	Aluminium	ON-OFF
	WALLIE-18-NW-1523-RD-BM-HV	18	1700lm	4000K	80	220-240V AC	1523	Black Mat	Aluminium	ON-OFF
	WALLIE-18-NW-1523-RD-BR-HV	18	1700lm	4000K	80	220-240V AC	1523	Brown	Aluminium	ON-OFF
	WALLIE-18-NW-1523-RD-WM-HV	18	1700lm	4000K	80	220-240V AC	1523	White Mat	Aluminium	ON-OFF
	WALLIE-18-NW-1538-RD-AM-HV	18	1700lm	4000K	80	220-240V AC	1538	Anthracite Mat	Aluminium	ON-OFF
	WALLIE-18-NW-1538-RD-BM-HV	18	1700lm	4000K	80	220-240V AC	1538	Black Mat	Aluminium	ON-OFF
	WALLIE-18-NW-1538-RD-BR-HV	18	1700lm	4000K	80	220-240V AC	1538	Brown	Aluminium	ON-OFF
	WALLIE-18-NW-1538-RD-WM-HV	18	1700lm	4000K	80	220-240V AC	1538	White Mat	Aluminium	ON-OFF
	WALLIE-18-NW-1545-RD-AM-HV	18	1700lm	4000K	80	220-240V AC	1545	Anthracite Mat	Aluminium	ON-OFF
	WALLIE-18-NW-1545-RD-BM-HV	18	1700lm	4000K	80	220-240V AC	1545	Black Mat	Aluminium	ON-OFF

Niviss reserves the right to make technical changes without prior notice
product_card_20261114_002049

	WALLIE-18-NW-1545-RD-BR-HV	18	1700lm	4000K	80	220-240V AC	1545	Brown	Aluminium	ON-OFF
	WALLIE-18-NW-1545-RD-WM-HV	18	1700lm	4000K	80	220-240V AC	1545	White Mat	Aluminium	ON-OFF
	WALLIE-18-NW-1560-RD-AM-HV	18	1700lm	4000K	80	220-240V AC	1560	Anthracite Mat	Aluminium	ON-OFF
	WALLIE-18-NW-1560-RD-BM-HV	18	1700lm	4000K	80	220-240V AC	1560	Black Mat	Aluminium	ON-OFF
	WALLIE-18-NW-1560-RD-BR-HV	18	1700lm	4000K	80	220-240V AC	1560	Brown	Aluminium	ON-OFF
	WALLIE-18-NW-1560-RD-WM-HV	18	1700lm	4000K	80	220-240V AC	1560	White Mat	Aluminium	ON-OFF
	WALLIE-18-NW-2315-RD-AM-HV	18	1700lm	4000K	80	220-240V AC	2315	Anthracite Mat	Aluminium	ON-OFF
	WALLIE-18-NW-2315-RD-BM-HV	18	1700lm	4000K	80	220-240V AC	2315	Black Mat	Aluminium	ON-OFF
	WALLIE-18-NW-2315-RD-BR-HV	18	1700lm	4000K	80	220-240V AC	2315	Brown	Aluminium	ON-OFF
	WALLIE-18-NW-2315-RD-WM-HV	18	1700lm	4000K	80	220-240V AC	2315	White Mat	Aluminium	ON-OFF
	WALLIE-18-NW-2323-RD-AM-HV	18	1700lm	4000K	80	220-240V AC	2323	Anthracite Mat	Aluminium	ON-OFF
	WALLIE-18-NW-2323-RD-BM-HV	18	1700lm	4000K	80	220-240V AC	2323	Black Mat	Aluminium	ON-OFF
	WALLIE-18-NW-2323-RD-BR-HV	18	1700lm	4000K	80	220-240V AC	2323	Brown	Aluminium	ON-OFF
	WALLIE-18-NW-2323-RD-WM-HV	18	1700lm	4000K	80	220-240V AC	2323	White Mat	Aluminium	ON-OFF
	WALLIE-18-NW-2338-RD-AM-HV	18	1700lm	4000K	80	220-240V AC	2338	Anthracite Mat	Aluminium	ON-OFF

	WALLIE-18-NW-2338-RD-BM-HV	18	1700lm	4000K	80	220-240V AC	2338	Black Mat	Aluminium	ON-OFF
	WALLIE-18-NW-2338-RD-BR-HV	18	1700lm	4000K	80	220-240V AC	2338	Brown	Aluminium	ON-OFF
	WALLIE-18-NW-2338-RD-WM-HV	18	1700lm	4000K	80	220-240V AC	2338	White Mat	Aluminium	ON-OFF
	WALLIE-18-NW-2345-RD-AM-HV	18	1700lm	4000K	80	220-240V AC	2345	Anthracite Mat	Aluminium	ON-OFF
	WALLIE-18-NW-2345-RD-BM-HV	18	1700lm	4000K	80	220-240V AC	2345	Black Mat	Aluminium	ON-OFF
	WALLIE-18-NW-2345-RD-BR-HV	18	1700lm	4000K	80	220-240V AC	2345	Brown	Aluminium	ON-OFF
	WALLIE-18-NW-2345-RD-WM-HV	18	1700lm	4000K	80	220-240V AC	2345	White Mat	Aluminium	ON-OFF
	WALLIE-18-NW-2360-RD-AM-HV	18	1700lm	4000K	80	220-240V AC	2360	Anthracite Mat	Aluminium	ON-OFF
	WALLIE-18-NW-2360-RD-BM-HV	18	1700lm	4000K	80	220-240V AC	2360	Black Mat	Aluminium	ON-OFF
	WALLIE-18-NW-2360-RD-BR-HV	18	1700lm	4000K	80	220-240V AC	2360	Brown	Aluminium	ON-OFF
	WALLIE-18-NW-2360-RD-WM-HV	18	1700lm	4000K	80	220-240V AC	2360	White Mat	Aluminium	ON-OFF
	WALLIE-18-NW-3815-RD-AM-HV	18	1700lm	4000K	80	220-240V AC	3815	Anthracite Mat	Aluminium	ON-OFF
	WALLIE-18-NW-3815-RD-BM-HV	18	1700lm	4000K	80	220-240V AC	3815	Black Mat	Aluminium	ON-OFF
	WALLIE-18-NW-3815-RD-BR-HV	18	1700lm	4000K	80	220-240V AC	3815	Brown	Aluminium	ON-OFF
	WALLIE-18-NW-3815-RD-WM-HV	18	1700lm	4000K	80	220-240V AC	3815	White Mat	Aluminium	ON-OFF

Niviss reserves the right to make technical changes without prior notice
product_card_20261114_002049

	WALLIE-18-NW-3823-RD-AM-HV	18	1700lm	4000K	80	220-240V AC	3823	Anthracite Mat	Aluminium	ON-OFF
	WALLIE-18-NW-3823-RD-BM-HV	18	1700lm	4000K	80	220-240V AC	3823	Black Mat	Aluminium	ON-OFF
	WALLIE-18-NW-3823-RD-BR-HV	18	1700lm	4000K	80	220-240V AC	3823	Brown	Aluminium	ON-OFF
	WALLIE-18-NW-3823-RD-WM-HV	18	1700lm	4000K	80	220-240V AC	3823	White Mat	Aluminium	ON-OFF
	WALLIE-18-NW-3838-RD-AM-HV	18	1700lm	4000K	80	220-240V AC	3838	Anthracite Mat	Aluminium	ON-OFF
	WALLIE-18-NW-3838-RD-BM-HV	18	1700lm	4000K	80	220-240V AC	3838	Black Mat	Aluminium	ON-OFF
	WALLIE-18-NW-3838-RD-BR-HV	18	1700lm	4000K	80	220-240V AC	3838	Brown	Aluminium	ON-OFF
	WALLIE-18-NW-3838-RD-WM-HV	18	1700lm	4000K	80	220-240V AC	3838	White Mat	Aluminium	ON-OFF
	WALLIE-18-NW-3845-RD-AM-HV	18	1700lm	4000K	80	220-240V AC	3845	Anthracite Mat	Aluminium	ON-OFF
	WALLIE-18-NW-3845-RD-BM-HV	18	1700lm	4000K	80	220-240V AC	3845	Black Mat	Aluminium	ON-OFF
	WALLIE-18-NW-3845-RD-BR-HV	18	1700lm	4000K	80	220-240V AC	3845	Brown	Aluminium	ON-OFF
	WALLIE-18-NW-3845-RD-WM-HV	18	1700lm	4000K	80	220-240V AC	3845	White Mat	Aluminium	ON-OFF
	WALLIE-18-NW-3860-RD-AM-HV	18	1700lm	4000K	80	220-240V AC	3860	Anthracite Mat	Aluminium	ON-OFF
	WALLIE-18-NW-3860-RD-BM-HV	18	1700lm	4000K	80	220-240V AC	3860	Black Mat	Aluminium	ON-OFF
	WALLIE-18-NW-3860-RD-BR-HV	18	1700lm	4000K	80	220-240V AC	3860	Brown	Aluminium	ON-OFF

Niviss reserves the right to make technical changes without prior notice
product_card_20261114_002049

	WALLIE-18-NW-3860-RD-WM-HV	18	1700lm	4000K	80	220-240V AC	3860	White Mat	Aluminium	ON-OFF
	WALLIE-18-NW-4515-RD-AM-HV	18	1700lm	4000K	80	220-240V AC	4515	Anthracite Mat	Aluminium	ON-OFF
	WALLIE-18-NW-4515-RD-BM-HV	18	1700lm	4000K	80	220-240V AC	4515	Black Mat	Aluminium	ON-OFF
	WALLIE-18-NW-4515-RD-BR-HV	18	1700lm	4000K	80	220-240V AC	4515	Brown	Aluminium	ON-OFF
	WALLIE-18-NW-4515-RD-WM-HV	18	1700lm	4000K	80	220-240V AC	4515	White Mat	Aluminium	ON-OFF
	WALLIE-18-NW-4523-RD-AM-HV	18	1700lm	4000K	80	220-240V AC	4523	Anthracite Mat	Aluminium	ON-OFF
	WALLIE-18-NW-4523-RD-BM-HV	18	1700lm	4000K	80	220-240V AC	4523	Black Mat	Aluminium	ON-OFF
	WALLIE-18-NW-4523-RD-BR-HV	18	1700lm	4000K	80	220-240V AC	4523	Brown	Aluminium	ON-OFF
	WALLIE-18-NW-4523-RD-WM-HV	18	1700lm	4000K	80	220-240V AC	4523	White Mat	Aluminium	ON-OFF
	WALLIE-18-NW-4538-RD-AM-HV	18	1700lm	4000K	80	220-240V AC	4538	Anthracite Mat	Aluminium	ON-OFF
	WALLIE-18-NW-4538-RD-BM-HV	18	1700lm	4000K	80	220-240V AC	4538	Black Mat	Aluminium	ON-OFF
	WALLIE-18-NW-4538-RD-BR-HV	18	1700lm	4000K	80	220-240V AC	4538	Brown	Aluminium	ON-OFF
	WALLIE-18-NW-4538-RD-WM-HV	18	1700lm	4000K	80	220-240V AC	4538	White Mat	Aluminium	ON-OFF
	WALLIE-18-NW-4545-RD-AM-HV	18	1700lm	4000K	80	220-240V AC	4545	Anthracite Mat	Aluminium	ON-OFF
	WALLIE-18-NW-4545-RD-BM-HV	18	1700lm	4000K	80	220-240V AC	4545	Black Mat	Aluminium	ON-OFF

	WALLIE-18-NW-4545-RD-BR-HV	18	1700lm	4000K	80	220-240V AC	4545	Brown	Aluminium	ON-OFF
	WALLIE-18-NW-4545-RD-WM-HV	18	1700lm	4000K	80	220-240V AC	4545	White Mat	Aluminium	ON-OFF
	WALLIE-18-NW-4560-RD-AM-HV	18	1700lm	4000K	80	220-240V AC	4560	Anthracite Mat	Aluminium	ON-OFF
	WALLIE-18-NW-4560-RD-BM-HV	18	1700lm	4000K	80	220-240V AC	4560	Black Mat	Aluminium	ON-OFF
	WALLIE-18-NW-4560-RD-BR-HV	18	1700lm	4000K	80	220-240V AC	4560	Brown	Aluminium	ON-OFF
	WALLIE-18-NW-4560-RD-WM-HV	18	1700lm	4000K	80	220-240V AC	4560	White Mat	Aluminium	ON-OFF
	WALLIE-18-NW-6015-RD-AM-HV	18	1700lm	4000K	80	220-240V AC	6015	Anthracite Mat	Aluminium	ON-OFF
	WALLIE-18-NW-6015-RD-BM-HV	18	1700lm	4000K	80	220-240V AC	6015	Black Mat	Aluminium	ON-OFF
	WALLIE-18-NW-6015-RD-BR-HV	18	1700lm	4000K	80	220-240V AC	6015	Brown	Aluminium	ON-OFF
	WALLIE-18-NW-6015-RD-WM-HV	18	1700lm	4000K	80	220-240V AC	6015	White Mat	Aluminium	ON-OFF
	WALLIE-18-NW-6023-RD-AM-HV	18	1700lm	4000K	80	220-240V AC	6023	Anthracite Mat	Aluminium	ON-OFF
	WALLIE-18-NW-6023-RD-BM-HV	18	1700lm	4000K	80	220-240V AC	6023	Black Mat	Aluminium	ON-OFF
	WALLIE-18-NW-6023-RD-BR-HV	18	1700lm	4000K	80	220-240V AC	6023	Brown	Aluminium	ON-OFF
	WALLIE-18-NW-6023-RD-WM-HV	18	1700lm	4000K	80	220-240V AC	6023	White Mat	Aluminium	ON-OFF
	WALLIE-18-NW-6038-RD-AM-HV	18	1700lm	4000K	80	220-240V AC	6038	Anthracite Mat	Aluminium	ON-OFF

	WALLIE-18-NW-6038-RD-BM-HV	18	1700lm	4000K	80	220-240V AC	6038	Black Mat	Aluminium	ON-OFF
	WALLIE-18-NW-6038-RD-BR-HV	18	1700lm	4000K	80	220-240V AC	6038	Brown	Aluminium	ON-OFF
	WALLIE-18-NW-6038-RD-WM-HV	18	1700lm	4000K	80	220-240V AC	6038	White Mat	Aluminium	ON-OFF
	WALLIE-18-NW-6045-RD-AM-HV	18	1700lm	4000K	80	220-240V AC	6045	Anthracite Mat	Aluminium	ON-OFF
	WALLIE-18-NW-6045-RD-BM-HV	18	1700lm	4000K	80	220-240V AC	6045	Black Mat	Aluminium	ON-OFF
	WALLIE-18-NW-6045-RD-BR-HV	18	1700lm	4000K	80	220-240V AC	6045	Brown	Aluminium	ON-OFF
	WALLIE-18-NW-6045-RD-WM-HV	18	1700lm	4000K	80	220-240V AC	6045	White Mat	Aluminium	ON-OFF
	WALLIE-18-NW-6060-RD-AM-HV	18	1700lm	4000K	80	220-240V AC	6060	Anthracite Mat	Aluminium	ON-OFF
	WALLIE-18-NW-6060-RD-BM-HV	18	1700lm	4000K	80	220-240V AC	6060	Black Mat	Aluminium	ON-OFF
	WALLIE-18-NW-6060-RD-BR-HV	18	1700lm	4000K	80	220-240V AC	6060	Brown	Aluminium	ON-OFF
	WALLIE-18-NW-6060-RD-WM-HV	18	1700lm	4000K	80	220-240V AC	6060	White Mat	Aluminium	ON-OFF
	WALLIE-18-VW-1515-RD-AM-HV	18	1500lm	2700K	90	220-240V AC	1515	Anthracite Mat	Aluminium	ON-OFF
	WALLIE-18-VW-1515-RD-BM-HV	18	1500lm	2700K	90	220-240V AC	1515	Black Mat	Aluminium	ON-OFF
	WALLIE-18-VW-1515-RD-BR-HV	18	1500lm	2700K	90	220-240V AC	1515	Brown	Aluminium	ON-OFF
	WALLIE-18-VW-1515-RD-WM-HV	18	1500lm	2700K	90	220-240V AC	1515	White Mat	Aluminium	ON-OFF

	WALLIE-18-VW-1523-RD-AM-HV	18	1500lm	2700K	90	220-240V AC	1523	Anthracite Mat	Aluminium	ON-OFF
	WALLIE-18-VW-1523-RD-BM-HV	18	1500lm	2700K	90	220-240V AC	1523	Black Mat	Aluminium	ON-OFF
	WALLIE-18-VW-1523-RD-BR-HV	18	1500lm	2700K	90	220-240V AC	1523	Brown	Aluminium	ON-OFF
	WALLIE-18-VW-1523-RD-WM-HV	18	1500lm	2700K	90	220-240V AC	1523	White Mat	Aluminium	ON-OFF
	WALLIE-18-VW-1538-RD-AM-HV	18	1500lm	2700K	90	220-240V AC	1538	Anthracite Mat	Aluminium	ON-OFF
	WALLIE-18-VW-1538-RD-BM-HV	18	1500lm	2700K	90	220-240V AC	1538	Black Mat	Aluminium	ON-OFF
	WALLIE-18-VW-1538-RD-BR-HV	18	1500lm	2700K	90	220-240V AC	1538	Brown	Aluminium	ON-OFF
	WALLIE-18-VW-1538-RD-WM-HV	18	1500lm	2700K	90	220-240V AC	1538	White Mat	Aluminium	ON-OFF
	WALLIE-18-VW-1545-RD-AM-HV	18	1500lm	2700K	90	220-240V AC	1545	Anthracite Mat	Aluminium	ON-OFF
	WALLIE-18-VW-1545-RD-BM-HV	18	1500lm	2700K	90	220-240V AC	1545	Black Mat	Aluminium	ON-OFF
	WALLIE-18-VW-1545-RD-BR-HV	18	1500lm	2700K	90	220-240V AC	1545	Brown	Aluminium	ON-OFF
	WALLIE-18-VW-1545-RD-WM-HV	18	1500lm	2700K	90	220-240V AC	1545	White Mat	Aluminium	ON-OFF
	WALLIE-18-VW-1560-RD-AM-HV	18	1500lm	2700K	90	220-240V AC	1560	Anthracite Mat	Aluminium	ON-OFF
	WALLIE-18-VW-1560-RD-BM-HV	18	1500lm	2700K	90	220-240V AC	1560	Black Mat	Aluminium	ON-OFF
	WALLIE-18-VW-1560-RD-BR-HV	18	1500lm	2700K	90	220-240V AC	1560	Brown	Aluminium	ON-OFF

Niviss reserves the right to make technical changes without prior notice
product_card_20261114_002049

	WALLIE-18-VW-1560-RD-WM-HV	18	1500lm	2700K	90	220-240V AC	1560	White Mat	Aluminium	ON-OFF
	WALLIE-18-VW-2315-RD-AM-HV	18	1500lm	2700K	90	220-240V AC	2315	Anthracite Mat	Aluminium	ON-OFF
	WALLIE-18-VW-2315-RD-BM-HV	18	1500lm	2700K	90	220-240V AC	2315	Black Mat	Aluminium	ON-OFF
	WALLIE-18-VW-2315-RD-BR-HV	18	1500lm	2700K	90	220-240V AC	2315	Brown	Aluminium	ON-OFF
	WALLIE-18-VW-2315-RD-WM-HV	18	1500lm	2700K	90	220-240V AC	2315	White Mat	Aluminium	ON-OFF
	WALLIE-18-VW-2323-RD-AM-HV	18	1500lm	2700K	90	220-240V AC	2323	Anthracite Mat	Aluminium	ON-OFF
	WALLIE-18-VW-2323-RD-BM-HV	18	1500lm	2700K	90	220-240V AC	2323	Black Mat	Aluminium	ON-OFF
	WALLIE-18-VW-2323-RD-BR-HV	18	1500lm	2700K	90	220-240V AC	2323	Brown	Aluminium	ON-OFF
	WALLIE-18-VW-2323-RD-WM-HV	18	1500lm	2700K	90	220-240V AC	2323	White Mat	Aluminium	ON-OFF
	WALLIE-18-VW-2338-RD-AM-HV	18	1500lm	2700K	90	220-240V AC	2338	Anthracite Mat	Aluminium	ON-OFF
	WALLIE-18-VW-2338-RD-BM-HV	18	1500lm	2700K	90	220-240V AC	2338	Black Mat	Aluminium	ON-OFF
	WALLIE-18-VW-2338-RD-BR-HV	18	1500lm	2700K	90	220-240V AC	2338	Brown	Aluminium	ON-OFF
	WALLIE-18-VW-2338-RD-WM-HV	18	1500lm	2700K	90	220-240V AC	2338	White Mat	Aluminium	ON-OFF
	WALLIE-18-VW-2345-RD-AM-HV	18	1500lm	2700K	90	220-240V AC	2345	Anthracite Mat	Aluminium	ON-OFF
	WALLIE-18-VW-2345-RD-BM-HV	18	1500lm	2700K	90	220-240V AC	2345	Black Mat	Aluminium	ON-OFF

	WALLIE-18-VW-2345-RD-BR-HV	18	1500lm	2700K	90	220-240V AC	2345	Brown	Aluminium	ON-OFF
	WALLIE-18-VW-2345-RD-WM-HV	18	1500lm	2700K	90	220-240V AC	2345	White Mat	Aluminium	ON-OFF
	WALLIE-18-VW-2360-RD-AM-HV	18	1500lm	2700K	90	220-240V AC	2360	Anthracite Mat	Aluminium	ON-OFF
	WALLIE-18-VW-2360-RD-BM-HV	18	1500lm	2700K	90	220-240V AC	2360	Black Mat	Aluminium	ON-OFF
	WALLIE-18-VW-2360-RD-BR-HV	18	1500lm	2700K	90	220-240V AC	2360	Brown	Aluminium	ON-OFF
	WALLIE-18-VW-2360-RD-WM-HV	18	1500lm	2700K	90	220-240V AC	2360	White Mat	Aluminium	ON-OFF
	WALLIE-18-VW-3815-RD-AM-HV	18	1500lm	2700K	90	220-240V AC	3815	Anthracite Mat	Aluminium	ON-OFF
	WALLIE-18-VW-3815-RD-BM-HV	18	1500lm	2700K	90	220-240V AC	3815	Black Mat	Aluminium	ON-OFF
	WALLIE-18-VW-3815-RD-BR-HV	18	1500lm	2700K	90	220-240V AC	3815	Brown	Aluminium	ON-OFF
	WALLIE-18-VW-3815-RD-WM-HV	18	1500lm	2700K	90	220-240V AC	3815	White Mat	Aluminium	ON-OFF
	WALLIE-18-VW-3823-RD-AM-HV	18	1500lm	2700K	90	220-240V AC	3823	Anthracite Mat	Aluminium	ON-OFF
	WALLIE-18-VW-3823-RD-BM-HV	18	1500lm	2700K	90	220-240V AC	3823	Black Mat	Aluminium	ON-OFF
	WALLIE-18-VW-3823-RD-BR-HV	18	1500lm	2700K	90	220-240V AC	3823	Brown	Aluminium	ON-OFF
	WALLIE-18-VW-3823-RD-WM-HV	18	1500lm	2700K	90	220-240V AC	3823	White Mat	Aluminium	ON-OFF
	WALLIE-18-VW-3838-RD-AM-HV	18	1500lm	2700K	90	220-240V AC	3838	Anthracite Mat	Aluminium	ON-OFF

	WALLIE-18-VW-3838-RD-BM-HV	18	1500lm	2700K	90	220-240V AC	3838	Black Mat	Aluminium	ON-OFF
	WALLIE-18-VW-3838-RD-BR-HV	18	1500lm	2700K	90	220-240V AC	3838	Brown	Aluminium	ON-OFF
	WALLIE-18-VW-3838-RD-WM-HV	18	1500lm	2700K	90	220-240V AC	3838	White Mat	Aluminium	ON-OFF
	WALLIE-18-VW-3845-RD-AM-HV	18	1500lm	2700K	90	220-240V AC	3845	Anthracite Mat	Aluminium	ON-OFF
	WALLIE-18-VW-3845-RD-BM-HV	18	1500lm	2700K	90	220-240V AC	3845	Black Mat	Aluminium	ON-OFF
	WALLIE-18-VW-3845-RD-BR-HV	18	1500lm	2700K	90	220-240V AC	3845	Brown	Aluminium	ON-OFF
	WALLIE-18-VW-3845-RD-WM-HV	18	1500lm	2700K	90	220-240V AC	3845	White Mat	Aluminium	ON-OFF
	WALLIE-18-VW-3860-RD-AM-HV	18	1500lm	2700K	90	220-240V AC	3860	Anthracite Mat	Aluminium	ON-OFF
	WALLIE-18-VW-3860-RD-BM-HV	18	1500lm	2700K	90	220-240V AC	3860	Black Mat	Aluminium	ON-OFF
	WALLIE-18-VW-3860-RD-BR-HV	18	1500lm	2700K	90	220-240V AC	3860	Brown	Aluminium	ON-OFF
	WALLIE-18-VW-3860-RD-WM-HV	18	1500lm	2700K	90	220-240V AC	3860	White Mat	Aluminium	ON-OFF
	WALLIE-18-VW-4515-RD-AM-HV	18	1500lm	2700K	90	220-240V AC	4515	Anthracite Mat	Aluminium	ON-OFF
	WALLIE-18-VW-4515-RD-BM-HV	18	1500lm	2700K	90	220-240V AC	4515	Black Mat	Aluminium	ON-OFF
	WALLIE-18-VW-4515-RD-BR-HV	18	1500lm	2700K	90	220-240V AC	4515	Brown	Aluminium	ON-OFF
	WALLIE-18-VW-4515-RD-WM-HV	18	1500lm	2700K	90	220-240V AC	4515	White Mat	Aluminium	ON-OFF

	WALLIE-18-VW-4523-RD-AM-HV	18	1500lm	2700K	90	220-240V AC	4523	Anthracite Mat	Aluminium	ON-OFF
	WALLIE-18-VW-4523-RD-BM-HV	18	1500lm	2700K	90	220-240V AC	4523	Black Mat	Aluminium	ON-OFF
	WALLIE-18-VW-4523-RD-BR-HV	18	1500lm	2700K	90	220-240V AC	4523	Brown	Aluminium	ON-OFF
	WALLIE-18-VW-4523-RD-WM-HV	18	1500lm	2700K	90	220-240V AC	4523	White Mat	Aluminium	ON-OFF
	WALLIE-18-VW-4538-RD-AM-HV	18	1500lm	2700K	90	220-240V AC	4538	Anthracite Mat	Aluminium	ON-OFF
	WALLIE-18-VW-4538-RD-BM-HV	18	1500lm	2700K	90	220-240V AC	4538	Black Mat	Aluminium	ON-OFF
	WALLIE-18-VW-4538-RD-BR-HV	18	1500lm	2700K	90	220-240V AC	4538	Brown	Aluminium	ON-OFF
	WALLIE-18-VW-4538-RD-WM-HV	18	1500lm	2700K	90	220-240V AC	4538	White Mat	Aluminium	ON-OFF
	WALLIE-18-VW-4545-RD-AM-HV	18	1500lm	2700K	90	220-240V AC	4545	Anthracite Mat	Aluminium	ON-OFF
	WALLIE-18-VW-4545-RD-BM-HV	18	1500lm	2700K	90	220-240V AC	4545	Black Mat	Aluminium	ON-OFF
	WALLIE-18-VW-4545-RD-BR-HV	18	1500lm	2700K	90	220-240V AC	4545	Brown	Aluminium	ON-OFF
	WALLIE-18-VW-4545-RD-WM-HV	18	1500lm	2700K	90	220-240V AC	4545	White Mat	Aluminium	ON-OFF
	WALLIE-18-VW-4560-RD-AM-HV	18	1500lm	2700K	90	220-240V AC	4560	Anthracite Mat	Aluminium	ON-OFF
	WALLIE-18-VW-4560-RD-BM-HV	18	1500lm	2700K	90	220-240V AC	4560	Black Mat	Aluminium	ON-OFF
	WALLIE-18-VW-4560-RD-BR-HV	18	1500lm	2700K	90	220-240V AC	4560	Brown	Aluminium	ON-OFF

	WALLIE-18-VW-4560-RD-WM-HV	18	1500lm	2700K	90	220-240V AC	4560	White Mat	Aluminium	ON-OFF
	WALLIE-18-VW-6015-RD-AM-HV	18	1500lm	2700K	90	220-240V AC	6015	Anthracite Mat	Aluminium	ON-OFF
	WALLIE-18-VW-6015-RD-BM-HV	18	1500lm	2700K	90	220-240V AC	6015	Black Mat	Aluminium	ON-OFF
	WALLIE-18-VW-6015-RD-BR-HV	18	1500lm	2700K	90	220-240V AC	6015	Brown	Aluminium	ON-OFF
	WALLIE-18-VW-6015-RD-WM-HV	18	1500lm	2700K	90	220-240V AC	6015	White Mat	Aluminium	ON-OFF
	WALLIE-18-VW-6023-RD-AM-HV	18	1500lm	2700K	90	220-240V AC	6023	Anthracite Mat	Aluminium	ON-OFF
	WALLIE-18-VW-6023-RD-BM-HV	18	1500lm	2700K	90	220-240V AC	6023	Black Mat	Aluminium	ON-OFF
	WALLIE-18-VW-6023-RD-BR-HV	18	1500lm	2700K	90	220-240V AC	6023	Brown	Aluminium	ON-OFF
	WALLIE-18-VW-6023-RD-WM-HV	18	1500lm	2700K	90	220-240V AC	6023	White Mat	Aluminium	ON-OFF
	WALLIE-18-VW-6038-RD-AM-HV	18	1500lm	2700K	90	220-240V AC	6038	Anthracite Mat	Aluminium	ON-OFF
	WALLIE-18-VW-6038-RD-BM-HV	18	1500lm	2700K	90	220-240V AC	6038	Black Mat	Aluminium	ON-OFF
	WALLIE-18-VW-6038-RD-BR-HV	18	1500lm	2700K	90	220-240V AC	6038	Brown	Aluminium	ON-OFF
	WALLIE-18-VW-6038-RD-WM-HV	18	1500lm	2700K	90	220-240V AC	6038	White Mat	Aluminium	ON-OFF
	WALLIE-18-VW-6045-RD-AM-HV	18	1500lm	2700K	90	220-240V AC	6045	Anthracite Mat	Aluminium	ON-OFF
	WALLIE-18-VW-6045-RD-BM-HV	18	1500lm	2700K	90	220-240V AC	6045	Black Mat	Aluminium	ON-OFF

	WALLIE-18-VW-6045-RD-BR-HV	18	1500lm	2700K	90	220-240V AC	6045	Brown	Aluminium	ON-OFF
	WALLIE-18-VW-6045-RD-WM-HV	18	1500lm	2700K	90	220-240V AC	6045	White Mat	Aluminium	ON-OFF
	WALLIE-18-VW-6060-RD-AM-HV	18	1500lm	2700K	90	220-240V AC	6060	Anthracite Mat	Aluminium	ON-OFF
	WALLIE-18-VW-6060-RD-BM-HV	18	1500lm	2700K	90	220-240V AC	6060	Black Mat	Aluminium	ON-OFF
	WALLIE-18-VW-6060-RD-BR-HV	18	1500lm	2700K	90	220-240V AC	6060	Brown	Aluminium	ON-OFF
	WALLIE-18-VW-6060-RD-WM-HV	18	1500lm	2700K	90	220-240V AC	6060	White Mat	Aluminium	ON-OFF
	WALLIE-18-WW-1515-RD-AM-HV	18	1600lm	3000K	90	220-240V AC	1515	Anthracite Mat	Aluminium	ON-OFF
	WALLIE-18-WW-1515-RD-BM-HV	18	1600lm	3000K	90	220-240V AC	1515	Black Mat	Aluminium	ON-OFF
	WALLIE-18-WW-1515-RD-BR-HV	18	1600lm	3000K	90	220-240V AC	1515	Brown	Aluminium	ON-OFF
	WALLIE-18-WW-1515-RD-WM-HV	18	1600lm	3000K	90	220-240V AC	1515	White Mat	Aluminium	ON-OFF
	WALLIE-18-WW-1523-RD-AM-HV	18	1600lm	3000K	90	220-240V AC	1523	Anthracite Mat	Aluminium	ON-OFF
	WALLIE-18-WW-1523-RD-BM-HV	18	1600lm	3000K	90	220-240V AC	1523	Black Mat	Aluminium	ON-OFF
	WALLIE-18-WW-1523-RD-BR-HV	18	1600lm	3000K	90	220-240V AC	1523	Brown	Aluminium	ON-OFF
	WALLIE-18-WW-1523-RD-WM-HV	18	1600lm	3000K	90	220-240V AC	1523	White Mat	Aluminium	ON-OFF
	WALLIE-18-WW-1538-RD-AM-HV	18	1600lm	3000K	90	220-240V AC	1538	Anthracite Mat	Aluminium	ON-OFF

	WALLIE-18-WW-1538-RD-BM-HV	18	1600lm	3000K	90	220-240V AC	1538	Black Mat	Aluminium	ON-OFF
	WALLIE-18-WW-1538-RD-BR-HV	18	1600lm	3000K	90	220-240V AC	1538	Brown	Aluminium	ON-OFF
	WALLIE-18-WW-1538-RD-WM-HV	18	1600lm	3000K	90	220-240V AC	1538	White Mat	Aluminium	ON-OFF
	WALLIE-18-WW-1545-RD-AM-HV	18	1600lm	3000K	90	220-240V AC	1545	Anthracite Mat	Aluminium	ON-OFF
	WALLIE-18-WW-1545-RD-BM-HV	18	1600lm	3000K	90	220-240V AC	1545	Black Mat	Aluminium	ON-OFF
	WALLIE-18-WW-1545-RD-BR-HV	18	1600lm	3000K	90	220-240V AC	1545	Brown	Aluminium	ON-OFF
	WALLIE-18-WW-1545-RD-WM-HV	18	1600lm	3000K	90	220-240V AC	1545	White Mat	Aluminium	ON-OFF
	WALLIE-18-WW-1560-RD-AM-HV	18	1600lm	3000K	90	220-240V AC	1560	Anthracite Mat	Aluminium	ON-OFF
	WALLIE-18-WW-1560-RD-BM-HV	18	1600lm	3000K	90	220-240V AC	1560	Black Mat	Aluminium	ON-OFF
	WALLIE-18-WW-1560-RD-BR-HV	18	1600lm	3000K	90	220-240V AC	1560	Brown	Aluminium	ON-OFF
	WALLIE-18-WW-1560-RD-WM-HV	18	1600lm	3000K	90	220-240V AC	1560	White Mat	Aluminium	ON-OFF
	WALLIE-18-WW-2315-RD-AM-HV	18	1600lm	3000K	90	220-240V AC	2315	Anthracite Mat	Aluminium	ON-OFF
	WALLIE-18-WW-2315-RD-BM-HV	18	1600lm	3000K	90	220-240V AC	2315	Black Mat	Aluminium	ON-OFF
	WALLIE-18-WW-2315-RD-BR-HV	18	1600lm	3000K	90	220-240V AC	2315	Brown	Aluminium	ON-OFF
	WALLIE-18-WW-2315-RD-WM-HV	18	1600lm	3000K	90	220-240V AC	2315	White Mat	Aluminium	ON-OFF

Niviss reserves the right to make technical changes without prior notice
product_card_20261114_002049

	WALLIE-18-WW-2323-RD-AM-HV	18	1600lm	3000K	90	220-240V AC	2323	Anthracite Mat	Aluminium	ON-OFF
	WALLIE-18-WW-2323-RD-BM-HV	18	1600lm	3000K	90	220-240V AC	2323	Black Mat	Aluminium	ON-OFF
	WALLIE-18-WW-2323-RD-BR-HV	18	1600lm	3000K	90	220-240V AC	2323	Brown	Aluminium	ON-OFF
	WALLIE-18-WW-2323-RD-WM-HV	18	1600lm	3000K	90	220-240V AC	2323	White Mat	Aluminium	ON-OFF
	WALLIE-18-WW-2338-RD-AM-HV	18	1600lm	3000K	90	220-240V AC	2338	Anthracite Mat	Aluminium	ON-OFF
	WALLIE-18-WW-2338-RD-BM-HV	18	1600lm	3000K	90	220-240V AC	2338	Black Mat	Aluminium	ON-OFF
	WALLIE-18-WW-2338-RD-BR-HV	18	1600lm	3000K	90	220-240V AC	2338	Brown	Aluminium	ON-OFF
	WALLIE-18-WW-2338-RD-WM-HV	18	1600lm	3000K	90	220-240V AC	2338	White Mat	Aluminium	ON-OFF
	WALLIE-18-WW-2345-RD-AM-HV	18	1600lm	3000K	90	220-240V AC	2345	Anthracite Mat	Aluminium	ON-OFF
	WALLIE-18-WW-2345-RD-BM-HV	18	1600lm	3000K	90	220-240V AC	2345	Black Mat	Aluminium	ON-OFF
	WALLIE-18-WW-2345-RD-BR-HV	18	1600lm	3000K	90	220-240V AC	2345	Brown	Aluminium	ON-OFF
	WALLIE-18-WW-2345-RD-WM-HV	18	1600lm	3000K	90	220-240V AC	2345	White Mat	Aluminium	ON-OFF
	WALLIE-18-WW-2360-RD-AM-HV	18	1600lm	3000K	90	220-240V AC	2360	Anthracite Mat	Aluminium	ON-OFF
	WALLIE-18-WW-2360-RD-BM-HV	18	1600lm	3000K	90	220-240V AC	2360	Black Mat	Aluminium	ON-OFF
	WALLIE-18-WW-2360-RD-BR-HV	18	1600lm	3000K	90	220-240V AC	2360	Brown	Aluminium	ON-OFF

	WALLIE-18-WW-2360-RD-WM-HV	18	1600lm	3000K	90	220-240V AC	2360	White Mat	Aluminium	ON-OFF
	WALLIE-18-WW-3815-RD-AM-HV	18	1600lm	3000K	90	220-240V AC	3815	Anthracite Mat	Aluminium	ON-OFF
	WALLIE-18-WW-3815-RD-BM-HV	18	1600lm	3000K	90	220-240V AC	3815	Black Mat	Aluminium	ON-OFF
	WALLIE-18-WW-3815-RD-BR-HV	18	1600lm	3000K	90	220-240V AC	3815	Brown	Aluminium	ON-OFF
	WALLIE-18-WW-3815-RD-WM-HV	18	1600lm	3000K	90	220-240V AC	3815	White Mat	Aluminium	ON-OFF
	WALLIE-18-WW-3823-RD-AM-HV	18	1600lm	3000K	90	220-240V AC	3823	Anthracite Mat	Aluminium	ON-OFF
	WALLIE-18-WW-3823-RD-BM-HV	18	1600lm	3000K	90	220-240V AC	3823	Black Mat	Aluminium	ON-OFF
	WALLIE-18-WW-3823-RD-BR-HV	18	1600lm	3000K	90	220-240V AC	3823	Brown	Aluminium	ON-OFF
	WALLIE-18-WW-3823-RD-WM-HV	18	1600lm	3000K	90	220-240V AC	3823	White Mat	Aluminium	ON-OFF
	WALLIE-18-WW-3838-RD-AM-HV	18	1600lm	3000K	90	220-240V AC	3838	Anthracite Mat	Aluminium	ON-OFF
	WALLIE-18-WW-3838-RD-BM-HV	18	1600lm	3000K	90	220-240V AC	3838	Black Mat	Aluminium	ON-OFF
	WALLIE-18-WW-3838-RD-BR-HV	18	1600lm	3000K	90	220-240V AC	3838	Brown	Aluminium	ON-OFF
	WALLIE-18-WW-3838-RD-WM-HV	18	1600lm	3000K	90	220-240V AC	3838	White Mat	Aluminium	ON-OFF
	WALLIE-18-WW-3845-RD-AM-HV	18	1600lm	3000K	90	220-240V AC	3845	Anthracite Mat	Aluminium	ON-OFF
	WALLIE-18-WW-3845-RD-BM-HV	18	1600lm	3000K	90	220-240V AC	3845	Black Mat	Aluminium	ON-OFF

	WALLIE-18-WW-3845-RD-BR-HV	18	1600lm	3000K	90	220-240V AC	3845	Brown	Aluminium	ON-OFF
	WALLIE-18-WW-3845-RD-WM-HV	18	1600lm	3000K	90	220-240V AC	3845	White Mat	Aluminium	ON-OFF
	WALLIE-18-WW-3860-RD-AM-HV	18	1600lm	3000K	90	220-240V AC	3860	Anthracite Mat	Aluminium	ON-OFF
	WALLIE-18-WW-3860-RD-BM-HV	18	1600lm	3000K	90	220-240V AC	3860	Black Mat	Aluminium	ON-OFF
	WALLIE-18-WW-3860-RD-BR-HV	18	1600lm	3000K	90	220-240V AC	3860	Brown	Aluminium	ON-OFF
	WALLIE-18-WW-3860-RD-WM-HV	18	1600lm	3000K	90	220-240V AC	3860	White Mat	Aluminium	ON-OFF
	WALLIE-18-WW-4515-RD-AM-HV	18	1600lm	3000K	90	220-240V AC	4515	Anthracite Mat	Aluminium	ON-OFF
	WALLIE-18-WW-4515-RD-BM-HV	18	1600lm	3000K	90	220-240V AC	4515	Black Mat	Aluminium	ON-OFF
	WALLIE-18-WW-4515-RD-BR-HV	18	1600lm	3000K	90	220-240V AC	4515	Brown	Aluminium	ON-OFF
	WALLIE-18-WW-4515-RD-WM-HV	18	1600lm	3000K	90	220-240V AC	4515	White Mat	Aluminium	ON-OFF
	WALLIE-18-WW-4523-RD-AM-HV	18	1600lm	3000K	90	220-240V AC	4523	Anthracite Mat	Aluminium	ON-OFF
	WALLIE-18-WW-4523-RD-BM-HV	18	1600lm	3000K	90	220-240V AC	4523	Black Mat	Aluminium	ON-OFF
	WALLIE-18-WW-4523-RD-BR-HV	18	1600lm	3000K	90	220-240V AC	4523	Brown	Aluminium	ON-OFF
	WALLIE-18-WW-4523-RD-WM-HV	18	1600lm	3000K	90	220-240V AC	4523	White Mat	Aluminium	ON-OFF
	WALLIE-18-WW-4538-RD-AM-HV	18	1600lm	3000K	90	220-240V AC	4538	Anthracite Mat	Aluminium	ON-OFF

	WALLIE-18-WW-4538-RD-BM-HV	18	1600lm	3000K	90	220-240V AC	4538	Black Mat	Aluminium	ON-OFF
	WALLIE-18-WW-4538-RD-BR-HV	18	1600lm	3000K	90	220-240V AC	4538	Brown	Aluminium	ON-OFF
	WALLIE-18-WW-4538-RD-WM-HV	18	1600lm	3000K	90	220-240V AC	4538	White Mat	Aluminium	ON-OFF
	WALLIE-18-WW-4545-RD-AM-HV	18	1600lm	3000K	90	220-240V AC	4545	Anthracite Mat	Aluminium	ON-OFF
	WALLIE-18-WW-4545-RD-BM-HV	18	1600lm	3000K	90	220-240V AC	4545	Black Mat	Aluminium	ON-OFF
	WALLIE-18-WW-4545-RD-BR-HV	18	1600lm	3000K	90	220-240V AC	4545	Brown	Aluminium	ON-OFF
	WALLIE-18-WW-4545-RD-WM-HV	18	1600lm	3000K	90	220-240V AC	4545	White Mat	Aluminium	ON-OFF
	WALLIE-18-WW-4560-RD-AM-HV	18	1600lm	3000K	90	220-240V AC	4560	Anthracite Mat	Aluminium	ON-OFF
	WALLIE-18-WW-4560-RD-BM-HV	18	1600lm	3000K	90	220-240V AC	4560	Black Mat	Aluminium	ON-OFF
	WALLIE-18-WW-4560-RD-BR-HV	18	1600lm	3000K	90	220-240V AC	4560	Brown	Aluminium	ON-OFF
	WALLIE-18-WW-4560-RD-WM-HV	18	1600lm	3000K	90	220-240V AC	4560	White Mat	Aluminium	ON-OFF
	WALLIE-18-WW-6015-RD-AM-HV	18	1600lm	3000K	90	220-240V AC	6015	Anthracite Mat	Aluminium	ON-OFF
	WALLIE-18-WW-6015-RD-BM-HV	18	1600lm	3000K	90	220-240V AC	6015	Black Mat	Aluminium	ON-OFF
	WALLIE-18-WW-6015-RD-BR-HV	18	1600lm	3000K	90	220-240V AC	6015	Brown	Aluminium	ON-OFF
	WALLIE-18-WW-6015-RD-WM-HV	18	1600lm	3000K	90	220-240V AC	6015	White Mat	Aluminium	ON-OFF

	WALLIE-18-WW-6023-RD-AM-HV	18	1600lm	3000K	90	220-240V AC	6023	Anthracite Mat	Aluminium	ON-OFF
	WALLIE-18-WW-6023-RD-BM-HV	18	1600lm	3000K	90	220-240V AC	6023	Black Mat	Aluminium	ON-OFF
	WALLIE-18-WW-6023-RD-BR-HV	18	1600lm	3000K	90	220-240V AC	6023	Brown	Aluminium	ON-OFF
	WALLIE-18-WW-6023-RD-WM-HV	18	1600lm	3000K	90	220-240V AC	6023	White Mat	Aluminium	ON-OFF
	WALLIE-18-WW-6038-RD-AM-HV	18	1600lm	3000K	90	220-240V AC	6038	Anthracite Mat	Aluminium	ON-OFF
	WALLIE-18-WW-6038-RD-BM-HV	18	1600lm	3000K	90	220-240V AC	6038	Black Mat	Aluminium	ON-OFF
	WALLIE-18-WW-6038-RD-BR-HV	18	1600lm	3000K	90	220-240V AC	6038	Brown	Aluminium	ON-OFF
	WALLIE-18-WW-6038-RD-WM-HV	18	1600lm	3000K	90	220-240V AC	6038	White Mat	Aluminium	ON-OFF
	WALLIE-18-WW-6045-RD-AM-HV	18	1600lm	3000K	90	220-240V AC	6045	Anthracite Mat	Aluminium	ON-OFF
	WALLIE-18-WW-6045-RD-BM-HV	18	1600lm	3000K	90	220-240V AC	6045	Black Mat	Aluminium	ON-OFF
	WALLIE-18-WW-6045-RD-BR-HV	18	1600lm	3000K	90	220-240V AC	6045	Brown	Aluminium	ON-OFF
	WALLIE-18-WW-6045-RD-WM-HV	18	1600lm	3000K	90	220-240V AC	6045	White Mat	Aluminium	ON-OFF
	WALLIE-18-WW-6060-RD-AM-HV	18	1600lm	3000K	90	220-240V AC	6060	Anthracite Mat	Aluminium	ON-OFF
	WALLIE-18-WW-6060-RD-BM-HV	18	1600lm	3000K	90	220-240V AC	6060	Black Mat	Aluminium	ON-OFF
	WALLIE-18-WW-6060-RD-BR-HV	18	1600lm	3000K	90	220-240V AC	6060	Brown	Aluminium	ON-OFF

Niviss reserves the right to make technical changes without prior notice
product_card_20261114_002049

	WALLIE-18-WW-6060-RD-WM-HV	18	1600lm	3000K	90	220-240V AC	6060	White Mat	Aluminium	ON-OFF
	WALLIE-9-NW-15-RD-AM-HV	9	850lm	4000K	80	220-240V AC	15	Anthracite Mat	Aluminium	ON-OFF
	WALLIE-9-NW-15-RD-BM-HV	9	850lm	4000K	80	220-240V AC	15	Black Mat	Aluminium	ON-OFF
	WALLIE-9-NW-15-RD-BR-HV	9	850lm	4000K	80	220-240V AC	15	Brown	Aluminium	ON-OFF
	WALLIE-9-NW-15-RD-WM-HV	9	850lm	4000K	80	220-240V AC	15	White Mat	Aluminium	ON-OFF
	WALLIE-9-NW-23-RD-AM-HV	9	850lm	4000K	80	220-240V AC	23	Anthracite Mat	Aluminium	ON-OFF
	WALLIE-9-NW-23-RD-BM-HV	9	850lm	4000K	80	220-240V AC	23	Black Mat	Aluminium	ON-OFF
	WALLIE-9-NW-23-RD-BR-HV	9	850lm	4000K	80	220-240V AC	23	Brown	Aluminium	ON-OFF
	WALLIE-9-NW-23-RD-WM-HV	9	850lm	4000K	80	220-240V AC	23	White Mat	Aluminium	ON-OFF
	WALLIE-9-NW-38-RD-AM-HV	9	850lm	4000K	80	220-240V AC	38	Anthracite Mat	Aluminium	ON-OFF
	WALLIE-9-NW-38-RD-BM-HV	9	850lm	4000K	80	220-240V AC	38	Black Mat	Aluminium	ON-OFF
	WALLIE-9-NW-38-RD-BR-HV	9	850lm	4000K	80	220-240V AC	38	Brown	Aluminium	ON-OFF
	WALLIE-9-NW-38-RD-WM-HV	9	850lm	4000K	80	220-240V AC	38	White Mat	Aluminium	ON-OFF
	WALLIE-9-NW-45-RD-AM-HV	9	850lm	4000K	80	220-240V AC	45	Anthracite Mat	Aluminium	ON-OFF
	WALLIE-9-NW-45-RD-BM-HV	9	850lm	4000K	80	220-240V AC	45	Black Mat	Aluminium	ON-OFF
	WALLIE-9-NW-45-RD-BR-HV	9	850lm	4000K	80	220-240V AC	45	Brown	Aluminium	ON-OFF
	WALLIE-9-NW-45-RD-WM-HV	9	850lm	4000K	80	220-240V AC	45	White Mat	Aluminium	ON-OFF
	WALLIE-9-NW-60-RD-AM-HV	9	850lm	4000K	80	220-240V AC	60	Anthracite Mat	Aluminium	ON-OFF
	WALLIE-9-NW-60-RD-BM-HV	9	850lm	4000K	80	220-240V AC	60	Black Mat	Aluminium	ON-OFF
	WALLIE-9-NW-60-RD-BR-HV	9	850lm	4000K	80	220-240V AC	60	Brown	Aluminium	ON-OFF
	WALLIE-9-NW-60-RD-WM-HV	9	850lm	4000K	80	220-240V AC	60	White Mat	Aluminium	ON-OFF

	WALLIE-9-VW-15-RD-AM-HV	9	750lm	2700K	90	220-240V AC	15	Anthracite Mat	Aluminium	ON-OFF
	WALLIE-9-VW-15-RD-BM-HV	9	750lm	2700K	90	220-240V AC	15	Black Mat	Aluminium	ON-OFF
	WALLIE-9-VW-15-RD-BR-HV	9	750lm	2700K	90	220-240V AC	15	Brown	Aluminium	ON-OFF
	WALLIE-9-VW-15-RD-WM-HV	9	750lm	2700K	90	220-240V AC	15	White Mat	Aluminium	ON-OFF
	WALLIE-9-VW-23-RD-AM-HV	9	750lm	2700K	90	220-240V AC	23	Anthracite Mat	Aluminium	ON-OFF
	WALLIE-9-VW-23-RD-BM-HV	9	750lm	2700K	90	220-240V AC	23	Black Mat	Aluminium	ON-OFF
	WALLIE-9-VW-23-RD-BR-HV	9	750lm	2700K	90	220-240V AC	23	Brown	Aluminium	ON-OFF
	WALLIE-9-VW-23-RD-WM-HV	9	750lm	2700K	90	220-240V AC	23	White Mat	Aluminium	ON-OFF
	WALLIE-9-VW-38-RD-AM-HV	9	750lm	2700K	90	220-240V AC	38	Anthracite Mat	Aluminium	ON-OFF
	WALLIE-9-VW-38-RD-BM-HV	9	750lm	2700K	90	220-240V AC	38	Black Mat	Aluminium	ON-OFF
	WALLIE-9-VW-38-RD-BR-HV	9	750lm	2700K	90	220-240V AC	38	Brown	Aluminium	ON-OFF
	WALLIE-9-VW-38-RD-WM-HV	9	750lm	2700K	90	220-240V AC	38	White Mat	Aluminium	ON-OFF
	WALLIE-9-VW-45-RD-AM-HV	9	750lm	2700K	90	220-240V AC	45	Anthracite Mat	Aluminium	ON-OFF
	WALLIE-9-VW-45-RD-BM-HV	9	750lm	2700K	90	220-240V AC	45	Black Mat	Aluminium	ON-OFF
	WALLIE-9-VW-45-RD-BR-HV	9	750lm	2700K	90	220-240V AC	45	Brown	Aluminium	ON-OFF
	WALLIE-9-VW-45-RD-WM-HV	9	750lm	2700K	90	220-240V AC	45	White Mat	Aluminium	ON-OFF
	WALLIE-9-VW-60-RD-AM-HV	9	750lm	2700K	90	220-240V AC	60	Anthracite Mat	Aluminium	ON-OFF
	WALLIE-9-VW-60-RD-BM-HV	9	750lm	2700K	90	220-240V AC	60	Black Mat	Aluminium	ON-OFF
	WALLIE-9-VW-60-RD-BR-HV	9	750lm	2700K	90	220-240V AC	60	Brown	Aluminium	ON-OFF
	WALLIE-9-VW-60-RD-WM-HV	9	750lm	2700K	90	220-240V AC	60	White Mat	Aluminium	ON-OFF
	WALLIE-9-WW-15-RD-AM-HV	9	800lm	3000K	90	220-240V AC	15	Anthracite Mat	Aluminium	ON-OFF
	WALLIE-9-WW-15-RD-BM-HV	9	800lm	3000K	90	220-240V AC	15	Black Mat	Aluminium	ON-OFF

	WALLIE-9-WW-15-RD-BR-HV	9	800lm	3000K	90	220-240V AC	15	Brown	Aluminium	ON-OFF
	WALLIE-9-WW-15-RD-WM-HV	9	800lm	3000K	90	220-240V AC	15	White Mat	Aluminium	ON-OFF
	WALLIE-9-WW-23-RD-AM-HV	9	800lm	3000K	90	220-240V AC	23	Anthracite Mat	Aluminium	ON-OFF
	WALLIE-9-WW-23-RD-BM-HV	9	800lm	3000K	90	220-240V AC	23	Black Mat	Aluminium	ON-OFF
	WALLIE-9-WW-23-RD-BR-HV	9	800lm	3000K	90	220-240V AC	23	Brown	Aluminium	ON-OFF
	WALLIE-9-WW-23-RD-WM-HV	9	800lm	3000K	90	220-240V AC	23	White Mat	Aluminium	ON-OFF
	WALLIE-9-WW-38-RD-AM-HV	9	800lm	3000K	90	220-240V AC	38	Anthracite Mat	Aluminium	ON-OFF
	WALLIE-9-WW-38-RD-BM-HV	9	800lm	3000K	90	220-240V AC	38	Black Mat	Aluminium	ON-OFF
	WALLIE-9-WW-38-RD-BR-HV	9	800lm	3000K	90	220-240V AC	38	Brown	Aluminium	ON-OFF
	WALLIE-9-WW-38-RD-WM-HV	9	800lm	3000K	90	220-240V AC	38	White Mat	Aluminium	ON-OFF
	WALLIE-9-WW-45-RD-AM-HV	9	800lm	3000K	90	220-240V AC	45	Anthracite Mat	Aluminium	ON-OFF
	WALLIE-9-WW-45-RD-BM-HV	9	800lm	3000K	90	220-240V AC	45	Black Mat	Aluminium	ON-OFF
	WALLIE-9-WW-45-RD-BR-HV	9	800lm	3000K	90	220-240V AC	45	Brown	Aluminium	ON-OFF
	WALLIE-9-WW-45-RD-WM-HV	9	800lm	3000K	90	220-240V AC	45	White Mat	Aluminium	ON-OFF
	WALLIE-9-WW-60-RD-AM-HV	9	800lm	3000K	90	220-240V AC	60	Anthracite Mat	Aluminium	ON-OFF
	WALLIE-9-WW-60-RD-BM-HV	9	800lm	3000K	90	220-240V AC	60	Black Mat	Aluminium	ON-OFF
	WALLIE-9-WW-60-RD-BR-HV	9	800lm	3000K	90	220-240V AC	60	Brown	Aluminium	ON-OFF
	WALLIE-9-WW-60-RD-WM-HV	9	800lm	3000K	90	220-240V AC	60	White Mat	Aluminium	ON-OFF

OGÓLNE WARUNKI UŻYTKOWANIA

- Przed użyciem oprawy świetlnej należy upewnić się na jaki zakres napięć jest ona przeznaczona.
- Podłączenie do zasilania należy wykonać przy wyłączonym zasilaniu.
- Korzystać z odpowiednich gniazdek i wtyczek. Należy upewnić się, że gniazdka i wtyczki elektryczne są zgodne z napięciem i typem oprawy świetlnej.
- Stosować odpowiednie okablowanie do opraw świetlnych.
- Unikać przeciążenia obwodów elektrycznych, nie podłączając zbyt wielu opraw świetlnych do jednego gniazdka lub obwodu. Przed użyciem należy sprawdzić stan przewodu zasilającego i wtyczki pod kątem uszkodzeń lub zużycia.
- Podczas podłączenia oprawy świetlnej należy zwrócić uwagę na prawidłową polaryzację. Niewłaściwa polaryzacja może uniemożliwić prawidłowe działanie opraw świetlnych lub spowodować ich uszkodzenie.
- Montażu opraw świetlnych powinna dokonać osoba wykwalifikowana.
- Należy utrzymywać oprawy świetlne w czystości. Zanieczyszczenia i kurz mogą mieć negatywny wpływ na ich działanie.
- Postępować zgodnie z powyższym schematem podłączenia oprawy.
- Unikać bezpośredniej ekspozycji oczu na jasne źródło światła. Należy ustawić oprawy świetlne w sposób, który minimalizuje bezpośrednie naświetlenie oczu i/lub niekomfortowy poziom jasności.
- Upewnić się, że oprawa jest ustawiona na stabilnej powierzchni i trzymana z dala od materiałów łatwopalnych. Należy pozostawić wystarczającą ilość miejsca wokół oprawy, aby zapobiec przegrzaniu.
- Przechowywać z dala od ognia.

UWAGA DOTYCZĄCA ŚRODOWISKA!

Zabrania się wyrzucania przestarzałego i zużytego sprzętu elektrycznego i elektronicznego razem ze zwykłymi odpadami domowymi. Należy je odpowiednio posegregować i poddać recyklingowi. Stary sprzęt elektroniczny i elektryczny należy zwrócić do punktu zbiórki odpadów wyznaczonego przez firmę zajmującą się gospodarką odpadami. Zużyty sprzęt elektryczny i elektroniczny zostanie rozdzielony na materiały bazowe, które następnie zostaną poddane recyklingowi. Aby uzyskać więcej informacji na temat gospodarki odpadami, skontaktuj się z lokalnymi władzami, służbami zajmującymi się gospodarką odpadami lub sprzedawcą sprzętu elektronicznego i elektrycznego.

Niviss reserves the right to make technical changes without prior notice
product_card_20261114_002049